KONECRANES

MAINTENANCE MANUAL

BOXHUNTER

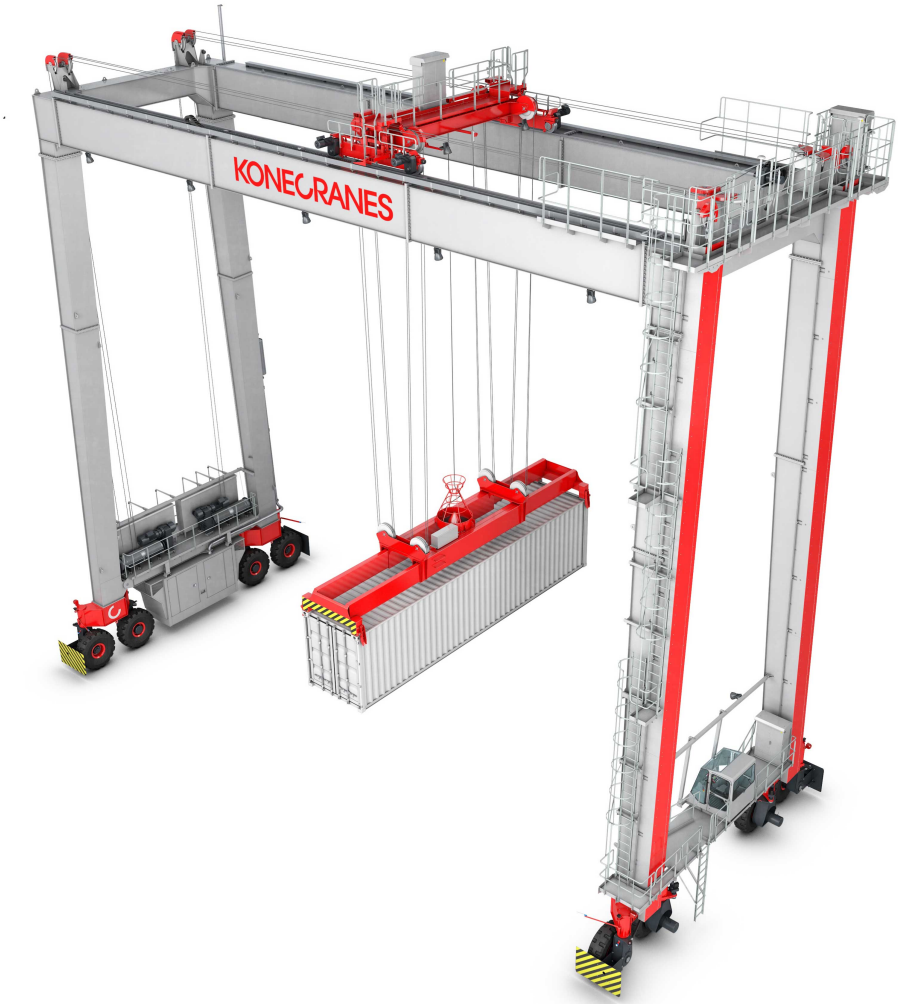

ORIGINAL INSTRUCTIONS
X036773en / A / 03 Jun 2016
G1719, Consumer Goods Myanmar Ltd

This document and the information contained herein, is the exclusive property of Konecranes Global Corporation and represents a non-public, confidential and proprietary trade secret that may not be reproduced, disclosed to other parties, altered or otherwise employed in any manner whatsoever without the express written consent of Konecranes Global Corporation. Copyright © 2016 Konecranes Global Corporation All rights reserved. 'Konecranes', 'Lifting Businesses' and C are either registered trademarks or trademarks of Konecranes Global Corporation.

TABLE OF CONTENTS

1 INTRODUCTION ... 9

1.1 About this manual ... 9

1.1.1 Use of the manual ... 9
1.1.2 Copyright notice ... 9
1.1.3 Terminology ... 9
1.1.4 Symbols used in this manual ... 10
1.1.5 Available technical documents ... 11

1.2 About this product ... 11

1.2.1 Use of the product ... 11
1.2.2 Terms of warranty ... 12
1.2.3 Identification of the product ... 12
1.2.4 Labels on the product ... 12
1.2.5 Standards and directives ... 12

1.3 Contact information ... 13

2 SAFETY AND ENVIRONMENT ... 14

2.1 Safety messages and signals ... 14

2.1.1 Signal words ... 14
2.1.2 Hazard symbols ... 14
2.1.3 Mandatory action symbols ... 17
2.1.4 Prohibited action symbols ... 18
2.1.5 Safety and information labels on the product ... 18
2.1.6 Location of the safety labels ... 18

2.2 Responsibilities of the owner ... 18

2.2.1 Preventing work-related hazards ... 18
2.2.2 Preventive maintenance ... 19
2.2.3 Personal protective equipment ... 19
2.2.4 Incident reporting ... 21

2.3 Limitations of the product ... 21

2.3.1 Operating conditions ... 21
2.3.2 Inclination angles ... 21
2.3.3 Prohibited use ... 21
2.3.4 Changes to the product ... 22

2.4 Danger zone ... 22

2.5 Safety devices ... 23

2.5.1 Visual and audible safety signals ... 23

2.6 Protective measures ... 24

2.6.1 Emergency stopping ... 24
2.6.2 Emergency stop locations ... 25
2.6.3 Main isolation switch ... 26
2.6.4 Lockout-tagout-tryout procedure ... 28
2.6.5 Releasing the air pressure ... 29
2.6.6 Fire safety ... 30

2.7 Emissions ... 32

2.7.1 Noise ... 32
2.7.2 Vibration ... 32

2.8 Personnel requirements ... 32

2.9 Environmental information ... 33

2.9.1 Product life cycle stages ... 33
2.9.2 Handling waste material ... 33

This document and the information contained herein, is the exclusive property of Konecranes Global Corporation and represents a non-public, confidential and proprietary trade secret that may not be reproduced, disclosed to other parties, altered or otherwise employed in any manner whatsoever without the express written consent of Konecranes Global Corporation. Copyright © 2016 Konecranes Global Corporation All rights reserved. ‘Konecranes’, ‘Lifting Businesses’ and C are either registered trademarks or trademarks of Konecranes Global Corporation.

3 PRODUCT DESCRIPTION ... 35
3.1 Technical data ... 36
3.1.1 Classification of BOXHUNTER crane mechanisms ... 36
3.2 BOXHUNTER main operations ... 37
3.3 Main diesel alternator set ... 38
3.3.1 Local control station of the main diesel alternator set ... 39
3.4 Gantry ... 40
3.4.1 Gantry steel structure ... 40
3.4.2 Bogies ... 41
3.4.3 Gantry travel ... 42
3.5 Trolley ... 46
3.5.1 Trolley traverse ... 47
3.6 Hoist ... 49
3.6.1 Hoisting machinery ... 49
3.6.2 Counterweight system ... 51
3.6.3 Skew machinery ... 52
3.6.4 Spreader ... 53
3.6.5 Rope reeving system ... 54
3.6.6 Hoist operations ... 59
3.7 Automation features ... 69
3.7.1 Auto-steering ... 69
3.7.2 Stack collision prevention ... 70
3.8 Electrical equipment cubicles ... 70
3.9 Camera system for stacking and gantry operations ... 70
3.10 Crane lights ... 71
3.11 Foldable service platform and ladders ... 71
3.12 Operator's cabin ... 72
3.13 Operating interfaces and control devices ... 73
3.13.1 Main display ... 73
3.13.2 Controller ... 81
3.13.3 Dashboard ... 84
3.13.4 Operator panel ... 85
3.13.5 Web CMS ... 112
3.14 Other cabin components ... 113
3.14.1 Wipers and washers ... 113
3.14.2 Alarm horn ... 113
3.14.3 Air conditioning in operator's cabin ... 113

4 MAINTENANCE INSTRUCTIONS ... 115
4.1 About maintenance ... 115
4.1.1 Routine inspections ... 115
4.1.2 Designed working period (DWP) ... 115
4.1.3 General overhaul ... 115
4.2 Safety during maintenance ... 115
4.3 Maintenance preparations ... 116
4.3.1 Tool requirements ... 117
4.4 Maintenance schedule ... 118
4.4.1 Routine inspection schedule ... 118
4.4.2 Structural inspection schedule ... 119
4.4.3 Lubrication schedule ... 119
4.5 Structural inspections ... 120
4.5.1 Inspection for fatigue crack growth ... 120

This document and the information contained herein, is the exclusive property of Konecranes Global Corporation and represents a non-public, confidential and proprietary trade secret that may not be reproduced, disclosed to other parties, altered or otherwise employed in any manner whatsoever without the express written consent of Konecranes Global Corporation. Copyright © 2016 Konecranes Global Corporation All rights reserved. 'Konecranes', 'Lifting Businesses' and C are either registered trademarks or trademarks of Konecranes Global Corporation.

4.5.2 Inspection methods.... 120
4.5.3 Inspection and tightening of bolted joints.... 121
4.5.4 Reporting procedure.... 122
4.5.5 Inspection for corrosion.... 123
4.5.6 Structural inspection plan.... 123
4.5.7 Surface treatment.... 140

4.6 Lubrication.... 145

4.6.1 Safety during lubrication.... 146
4.6.2 Lubrication points for the gantry.... 147
4.6.3 Lubrication points for the bogie.... 149
4.6.4 Lubrication points for the trolley.... 150
4.6.5 Lubrication points for the hoisting machinery unit.... 151
4.6.6 Lubrication points for the skew machinery.... 152
4.6.7 Lubrication points for the spreader.... 153
4.6.8 Lubrication points for the main diesel alternator set.... 153
4.6.9 Lubricating the gear reducers.... 153
4.6.10 Lubricating the kingpin bearings.... 164
4.6.11 Lubricating the wire ropes.... 165
4.6.12 Lubricating the couplings.... 166

4.7 Maintaining the gantry.... 174

4.7.1 Gantry maintenance schedule.... 174
4.7.2 Inspecting rope pulleys.... 177
4.7.3 Operating the gantry in the maintenance mode.... 178

4.8 Maintaining the bogies.... 179

4.8.1 Bogie maintenance schedule.... 179
4.8.2 Checking the tire pressure and inflating the tires.... 182
4.8.3 Tightening the wheel nut torque.... 184
4.8.4 Protecting and storing gantry wheels.... 184

4.9 Maintaining the trolley.... 186

4.9.1 Trolley maintenance schedule.... 186
4.9.2 Operating the trolley in the maintenance mode.... 189

4.10 Maintaining the hoisting machinery.... 190

4.10.1 Hoisting machinery maintenance schedule.... 190
4.10.2 Inspecting rope drums.... 193
4.10.3 Operating the hoisting machinery in the maintenance mode.... 194
4.10.4 Operating a single hoist in the maintenance mode.... 195

4.11 Maintaining the wire ropes.... 196

4.11.1 Wire rope inspection and maintenance schedule.... 196
4.11.2 Wire rope technical data.... 197
4.11.3 Wire rope inspections.... 198
4.11.4 Changing the wire ropes.... 203

4.12 Maintaining the skew machinery.... 234

4.12.1 Skew machinery maintenance schedule.... 234

4.13 Maintaining the spreader.... 236

4.13.1 Changing the spreader cable.... 236

4.14 Maintaining the diesel alternator set.... 242

4.14.1 Diesel alternator set maintenance schedule.... 242

4.15 Maintaining the motors.... 245

4.15.1 Maintenance schedule for motors.... 246
4.15.2 Motor assemblies.... 248
4.15.3 Inspecting the motors visually.... 250
4.15.4 Operational checks for the motor.... 251
4.15.5 Measuring insulation resistance.... 251
4.15.6 Troubleshooting exceptional vibration.... 252

This document and the information contained herein, is the exclusive property of Konecranes Global Corporation and represents a non-public, confidential and proprietary trade secret that may not be reproduced, disclosed to other parties, altered or otherwise employed in any manner whatsoever without the express written consent of Konecranes Global Corporation. Copyright © 2016 Konecranes Global Corporation All rights reserved. 'Konecranes', 'Lifting Businesses' and C are either registered trademarks or trademarks of Konecranes Global Corporation.

4.15.7 Maintaining the encoders ... 252
4.15.8 Replacing the motor ... 256
4.16 Maintaining the mechanical disc brakes ... 258
4.16.1 Safety during the brake maintenance ... 258
4.16.2 Maintenance schedule for mechanical disc brakes ... 260
4.16.3 Brake assemblies ... 262
4.16.4 Maintaining the trolley traveling brakes and the skew machinery brake ... 263
4.17 Maintaining the electrical equipment cubicle and its components ... 268
4.17.1 Maintenance schedule for the electrical equipment cubicle and its components ... 269
4.17.2 Cleaning the electrical equipment cubicles ... 270
4.17.3 Maintaining the resistor bank ... 271
4.17.4 Maintaining the frequency converters ... 271
4.17.5 Maintaining the brake control circuits ... 272
4.18 Maintaining the operator's cabin ... 272
4.18.1 Maintenance schedule for the operator's cabin ... 273
4.18.2 Checking and cleaning the wipers and washers ... 274
4.18.3 Cleaning the operator panel touch screen ... 274
4.18.4 Maintaining the camera and display system ... 274
4.19 Maintaining the fire extinguishers ... 277
4.19.1 Types and preferred sizes of fire extinguishers ... 278
4.19.2 Inspecting and refilling the fire extinguishers ... 278

5 TROUBLESHOOTING ... 279

6 TRANSPORTATION, STORAGE AND DISMANTLING ... 280
6.1 Transporting the product ... 280
6.2 Storing the product ... 280
6.2.1 Returning the product to use ... 280
6.3 Dismantling the product ... 280

APPENDIX I: RECOMMENDED LUBRICANTS ... 281
Lubricant groups ... 281
ISO viscosity grades for industrial oils ... 281
Group 1: Gearboxes (oil splash lubricated) and transmission chains ... 282
Group 3: Anti-friction bearings and plain bearings (grease lubricated) ... 283
Group 4 B: Steel wire ropes (grease lubricants) ... 285
Group 5: Electro-hydraulic thrusters ... 286
Group 6: Hydraulic systems ... 287
Group 8: Pumped or central grease lubrication system ... 288
Group 10: Light oil can ... 289
Group 11: Grease-packed couplings ... 290

APPENDIX II: OIL CHANGE SCHEDULE ... 291

APPENDIX III: TIGHTENING TORQUES ... 292

APPENDIX IV: TECHNICAL DATA FOR THE NM387-SERIES BRAKES ... 293

APPENDIX V: TECHNICAL DATA FOR THE NM404-SERIES BRAKE ... 294

APPENDIX VI: TECHNICAL DATA FOR THE NM408-SERIES BRAKE ... 295

This document and the information contained herein, is the exclusive property of Konecranes Global Corporation and represents a non-public, confidential and proprietary trade secret that may not be reproduced, disclosed to other parties, altered or otherwise employed in any manner whatsoever without the express written consent of Konecranes Global Corporation. Copyright © 2016 Konecranes Global Corporation All rights reserved. 'Konecranes', 'Lifting Businesses' and C are either registered trademarks or trademarks of Konecranes Global Corporation.

APPENDIX VII: STRUCTURAL INSPECTION DRAWINGS..... 296

APPENDIX VIII: BOLT ELONGATION DATA..... 297

This document and the information contained herein, is the exclusive property of Konecranes Global Corporation and represents a non-public, confidential and proprietary trade secret that may not be reproduced, disclosed to other parties, altered or otherwise employed in any manner whatsoever without the express written consent of Konecranes Global Corporation. Copyright © 2016 Konecranes Global Corporation All rights reserved. 'Konecranes', 'Lifting Businesses' and C are either registered trademarks or trademarks of Konecranes Global Corporation.

This document and the information contained herein, is the exclusive property of Konecranes Global Corporation and represents a non-public, confidential and proprietary trade secret that may not be reproduced, disclosed to other parties, altered or otherwise employed in any manner whatsoever without the express written consent of Konecranes Global Corporation. Copyright © 2016 Konecranes Global Corporation All rights reserved. 'Konecranes', 'Lifting Businesses' and C are either registered trademarks or trademarks of Konecranes Global Corporation.

1 INTRODUCTION

1.1 About this manual

This manual offers guidance to enable safe and efficient operation of the equipment.

Taking the time to read this manual helps you to prevent damage to the equipment, and, most importantly, personnel that are situated close to it. The equipment is safe when used correctly. However, there are many potential hazards that are associated with incorrect operation and these hazards can be avoided when you know how to recognize and anticipate them.

This manual also makes you aware of your responsibilities regarding the equipment and help you to ensure that it is kept in a safe operating condition throughout its lifetime.

This manual is not intended as a substitute for proper training but provides recommendations and methods for safe and efficient operation and maintenance. The owner of the equipment must ensure that operators are properly trained before operation and, always, comply with all of the applicable and prevailing safety and other standards, rules, and regulations.

1.1.1 Use of the manual

Every person that is exposed to the equipment of the manufacturer must, before operating, servicing and maintaining such products, read and understand the contents of this manual and strictly adhere and conform their conduct with and to the information, recommendations, and warnings that are provided in this manual.

NOTE ***Keep these instructions in a safe, accessible location for future reference by personnel operating the equipment or exposed to the operating equipment.***

WARNING! IGNORING INSTRUCTIONS HAZARD

Failure to follow the given instructions could cause death or serious injury.

Read and understand the contents of this manual before operating, servicing, and maintaining the equipment.

The manufacturer makes absolutely no warranty whatsoever regarding the contents of this manual, express or implied, whether arising by operation of law or otherwise, including, but not limited to, any implied warranties of merchantability or fitness for a particular purpose.

1.1.2 Copyright notice

This document and the information contained herein, is the exclusive property of Konecranes Global Corporation and represents a non-public, confidential and proprietary trade secret that may not be reproduced, disclosed to third parties, altered or otherwise employed in any manner whatsoever without the express written consent of Konecranes Global Corporation. Copyright © 2016 Konecranes Global Corporation. All rights reserved. Konecranes, Lifting Businesses and C are either registered trademarks or trademarks of Konecranes Global Corporation.

1.1.3 Terminology

All brand names, product names, and trademarks included in this manual are registered trademarks of their respective owners.

Authorized personnel	Persons who the owner authorizes and who have the necessary training to carry out operation or service actions, for example, electrical maintenance.

Copyright © (2016) Konecranes. All rights reserved.

Bogies	Arrangement of wheels and beams that forms the supporting under-carriage for a machine that travels along rails or other runway.
Diesel alternator set	Combination of the diesel engine and the alternator that are packaged into a large subassembly. The alternator converts mechanical power into electrical power.
Gantry crane	Crane where the bridge for carrying the trolley or trolleys is supported on legs which travel on a fixed runway, normally at ground level.
Counterweight system	Counterweight system consists of two weights, each roped with a hoisting machinery unit. When the spreader is lifted or lowered, the counterweight units run to the opposite direction along the access side gantry legs, compensating the partly the weight of an empty spreader and thus reducing the energy consumption of the crane.
Hoist	Drive mechanism for lifting and lowering the load.
Hoist ropes	The main multi-stranded steel wire ropes by which the spreader is suspended below the trolley.
Hoist skew	Motion that adjusts the axial alignment (clockwise or counterclock-wise) of the suspended load relative to the gantry.
Hoist trim	Motion that changes the inclination angle (up or down) of the suspended load relative to the ground level.
Main girders	The two large, box-section steel girders that support the trolley.
Main isolation switch	Power switch for disconnecting power supply for the crane on a runway. BOXHUNTER crane has two main isolation switches: the main isolator switch for crane and the main isolator for machineries.
Main isolator for machineries	Power switch for the machineries running the crane operations.
Main isolator switch for crane	Main circuit breaker for all electricity in the crane.
Runways	Specially prepared areas on the site where the gantry travel wheels run during normal stacking operations. At certain sites with soft ground conditions, these areas may be reinforced to support the weight of the crane.
Skew machinery	Machinery that enables a limited skewing motion for adjusting the axial alignment of the suspended load relative to the gantry.
Spreader	Load-spreading steel frame structure that is attached to the top of a container during lifting operations.
Trolley	Fabricated steel structure that traverses along the main girders and from which the spreader is suspended.

1.1.4 Symbols used in this manual

Familiarize yourself with the following symbols that are used in the manuals.

Symbol	Description
NOTE	Indicates items which require special attention by the reader. There is no obvious risk of injury that is associated with notes.
	Measurement inspection
	Visual inspection

Copyright © (2016) Konecranes. All rights reserved.

Symbol	Description
	Tools needed
	Operations inspection
	Grease brush lubrication needed
	Oil can lubrication needed
	Grease gun lubrication needed
	Noise check

1.1.5 Available technical documents

For this equipment, there are a range of technical documents which serve different purposes and audiences. Contact your equipment supplier if you require any of the documents that are listed here.

Operator's manual	Describes the responsibilities of the operator and operating instructions.
Maintenance manual	Describes the tasks that are related to routine maintenance, such as lubrication and inspections.
Mechanical drawings for the crane	Describes the crane mechanical design information.
Electrical drawings for the crane	Describes the crane electrical design information and item lists.
Certificates for the crane	Describes that the crane and crane components conform with directives and are manufactured according to standards. Also shows testing results.
Spare part manual	Includes part numbers for all parts supplied.

NOTE ***Store documents in a safe, dry place where they can be found easily when required.***

1.2 About this product

1.2.1 Use of the product

- Engaging a container of a specified size with a spreader and releasing it when it is on stable base
- Lifting or lowering the container
- Moving the trolley forward or backward, and changing its position and driving direction with or without the load

Copyright © (2016) Konecranes. All rights reserved.

- Moving the gantry forward or backward, and changing its position and driving direction with or without the load
- Moving the gantry to another working area in cross travel mode without the load
- Steering and controlling the equipment in the operator's cabin located on a sill beam close to the ground and equipped with camera views.

All the operations must be performed within the limits that are specified by the equipment duty class. For more information, see *Classification of BOXHUNTER crane mechanisms*.

For information on the required ambient conditions, see *Operating conditions*. Contact the manufacturer or manufacturer's representative in case of doubt.

1.2.2 Terms of warranty

The terms under which seller's equipment and/or services are warranted are defined pursuant to the warranty set forth in the contract between seller and customer for seller's products and/or services and, if not so set forth, the warranty for seller's products and/or services is seller's standard warranty in effect at the time of sale, a copy of which is available from seller upon request. THE FOREGOING REPRESENTS THE SOLE AND EXCLUSIVE WARRANTY GIVEN BY SELLER AND IS IN LIEU OF AND EXCLUDES ALL OTHER WARRANTIES, EXPRESS OR IMPLIED, ARISING BY OPERATION OF LAW OR OTHERWISE, INCLUDING BUT NOT LIMITED TO ANY IMPLIED WARRANTIES OF MERCHANTABILITY OR FITNESS FOR A PARTICULAR PURPOSE.

Seller provides no warranties for products manufactured or services provided by parties other than seller ("Third Party Products"). Modifying any seller product or incorporating any Third Party Product into any seller product or service without the seller's approval invalidates warranty. Seller does not accept, shall not have any responsibility and disclaims any liability for accidents, injury or physical or property damage arising as a consequence of such unauthorized modifications and/or incorporation of Third Party Products.

Further, e.g. each of the following invalidates any warranty of seller and relieves seller from any responsibility and liability for accidents, injury or physical or property damage: failure to operate and/or maintain products in accordance with the applicable installation and/or operator's manuals, owner's manuals, maintenance manuals, recommendations, and any other manuals, guidelines or recommendations concerning the maintenance and operation of products that may be communicated from time to time; side-pulling of load; shock loading; excessive jogging; eccentric loading; overloading; accidental occurrence; improper repair; improper handling or storage of products; chemical exposure; abnormal operating conditions not identified to seller in writing prior to seller's issuance of a quotation; or any other cause that in seller's sole discretion is not attributable to defects in material and workmanship.

1.2.3 Identification of the product

For information on the identification data plates on the crane, see the project-specific crane plate arrangement document or the rating plate in the operator's cabin.

1.2.4 Labels on the product

For information on the information labels on the crane, see the project-specific crane plate arrangement document.

1.2.5 Standards and directives

This product has been designed and manufactured to conform to the European Standard EN15011 U_7/Q_3 (F.E.M. 1.001 A7/U7/Q2).

General design standards are as follows:

Copyright © (2016) Konecranes. All rights reserved.

- Structure: FEM, EN
- Mechanisms: FEM, ISO, EN
- Electrical: IEC
- General safety, walkways, and service platforms: FEM, EN.

NOTE ***Konecranes reserves the right to modify the design and material specifications without prior notice.***

1.3 Contact information

Konecranes Finland Corporation

Koneenkatu 8

05830 Hyvinkää

Finland

Tel. +358 20 427 11

Fax +358 20 427 2289

During the warranty period, please send questions and claims regarding the product warranty to ports.warranty@konecranes.com.

Copyright © (2016) Konecranes. All rights reserved.

2 SAFETY AND ENVIRONMENT

2.1 Safety messages and signals

This section includes explanations of the safety symbols, signs, signals, and labels used on the product and in the documentation.

2.1.1 Signal words

The following signal words and symbols are used to identify safety messages in these instructions.

DANGER

Indicates an imminently hazardous situation that, if not avoided, will result in death or serious injury.

WARNING

Indicates a potentially hazardous situation that, if not avoided, could result in death or serious injury.

NOTICE

Indicates a potentially hazardous situation that, if not avoided, could result in damage to property or environment.

2.1.2 Hazard symbols

Hazard symbols are used to indicate the type of the hazard and the potential consequences. Hazard symbols are indicated by yellow triangle with black symbols and black triangle band surrounded by a yellow border. All personnel working on or at the proximity of the machine must understand and follow information given in all hazard symbols.

General hazard symbol

The general hazard symbol identifies important safety messages in this manual. When you see this symbol, carefully read and understand the message that follows, and inform other users when necessary.

Copyright © (2016) Konecranes. All rights reserved.

Mechanical hazard symbols

Conveyor rail hazard

Crushing hazard

Cutting hazard

Falling load hazard

Falling hazard

Falling object hazard

Flying objects to face hazard

Foot crushing hazard

Hand crushing hazard

Hand entanglement hazard

Hanging load hazard

Moving vehicle hazard

Run over hazard

Skin injection hazard

Slipping hazard

Tripping hazard

Electrical hazard symbols

Electrical hazard

Overhead power line hazard

Thermal hazard symbols

Hot surfaces hazard

Slippery when frost hazard

Copyright © (2016) Konecranes. All rights reserved.

Noise hazard symbols

Noise hazard

Radiation hazard symbols

Laser hazard

Light hazard

Material hazard symbols

Battery leakage hazard

Corrosive chemical substance hazard

Environment pollution hazard

Harmful substance hazard

High pressure hazard

Hot coolant hazard

Ignition hazard

Ergonimical hazard symbols

Lifting hazard

Copyright © (2016) Konecranes. All rights reserved.

2.1.3 Mandatory action symbols

Mandatory action symbols specify actions to be taken to avoid a hazard. Mandatory actions are indicated by white symbols on a blue background. All personnel working on or in proximity of the machine must understand and follow the information that is given in all mandatory action symbols.

Wear approved safety gloves

Wear approved hearing protectors

Wear approved protective clothing

Wear approved safety shoes

Wear approved safety harness

Wear approved hard hat

Wear approved high visibility clothing

Wear approved eye protector

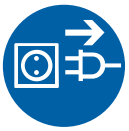

Disconnect equipment from power source

Apply indicator for pin-hole leak test

Use jack

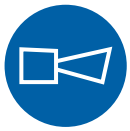

Alarm horn

Switch off and lock-out equipment

Two persons for handling

Use walkway

Wash hands

Read manual

Wear approved respirator

Use seat belt

Copyright © (2016) Konecranes. All rights reserved.

2.1.4 Prohibited action symbols

Prohibited action symbols indicate actions that are prohibited in order to avoid a hazard. Prohibited actions are indicated by a red circle with a red diagonal line across the circle. The action that is prohibited is always in black. All personnel working on or in proximity of the machine must understand and follow the information that is given in all prohibited action symbols.

General prohibition

Access prohibited

Do not climb

Do not remove guard

Do not smoke

Do not modify

Do not test for leak with hands

Do not touch

Pacemaker not allowed

Do not weld

No open fire

Restrict access

2.1.5 Safety and information labels on the product

The safety labels communicate the following:

- Level of risk that is based on the signal word **Danger**, **Warning**, or **Notice**
- Type of hazard, such as cutting parts, hanging load, hot surface, live parts
- Consequence of hazard, such as cutting, injection, crushing, burn, electric shock
- How to avoid the hazard

NOTE ***Always keep safety labels visible. Check the condition of safety labels daily. Before operating the machine, replace safety labels and instructions that are damaged, have come loose, or that do not meet the legibility requirements for safe viewing distance.***

2.1.6 Location of the safety labels

For information on the safety labels on the crane, see the project-specific plate arrangement document.

2.2 Responsibilities of the owner

2.2.1 Preventing work-related hazards

The owner of the product must ensure that the operators have a sufficient knowledge of the work-related hazards and of the ways to avoid the hazards.

The operator must always perform a local risk assessment before every work phase or shift. The assessment ensures that the operator stops and thinks about what to do before starting to work.

Copyright © (2016) Konecranes. All rights reserved.

- Identify potential hazards that could affect you, your colleagues, the environment, your product, or work method while you are performing the task
- Assess the risks and implement the actions that are needed to eliminate or reduce the risks

Only competent persons are allowed to carry out operation and other tasks. The responsibility of the owner is to:

- Provide training and orientation
- Validate training methods
- Verify competence and skills
- Monitor and evaluate user performance regularly

2.2.2 Preventive maintenance

Scheduled inspections and preventive maintenance are essential for keeping the product in safe working condition. Here are some general guidelines for preventive maintenance.

- It is the **product owner's responsibility** to organize proper regular inspections maintenance to ensure long-term safety, reliability, durability, operability, and warranty for the product.
- Owner must keep a record (log book) of all maintenance activities and usage relating to the product.
- Different maintenance actions must be carried out at different intervals and by different persons who are qualified and authorized to perform the checks which relate to them.
- Daily checks and minor lubrication must be carried out by operators or maintenance personnel. These checks are important for catching small faults before they become major faults.
- Maintenance actions, excluding the daily actions that are performed by operators, must be done by service personnel who are authorized by the owner of the product.
- Owner shall ensure that replacement parts and materials meet the specifications that are defined by the product manufacturer.
- Keep this manual in a safe, accessible location during the whole lifetime of the product.

WARNING! MACHINE MALFUNCTION HAZARD

Failure to regularly and properly maintain the product can result in death, injury, or damage.

Do not allow the product to be used if it is not in proper condition or if it has not been maintained correctly. Contact a service agent that is authorized by the manufacturer or manufacturer's representative immediately in case of doubts.

RISK OF PROPERTY DAMAGE

NOTICE

Only use genuine spare parts, materials, and lubricants that are approved by the product manufacturer or manufacturer's representative. For more information, see the product spare part manual.

2.2.3 Personal protective equipment

NOTE

This section proposes personal protective equipment to ensure the operator's full safety. Follow the local regulations and requirements of the working environment. Use only approved and accepted personal protective equipment that is marked with the CE symbol.

For safety, the operator or others near the product are required to wear personal protective equipment (PPE). Various types of PPE are available as listed below and must be selected according to the requirements of the working environment.

- Hard hat
- Eye-protector
- Hearing protectors
- Safety shoes
- Respirator

Copyright © (2016) Konecranes. All rights reserved.

- Safety gloves
- Protective clothing
- Safety harness when working at heights
- High-visibility clothing

Do not wear loose clothing or jewelry that can get caught on controls or pulled into moving parts of the product.

Tie back long hair. Long hair can get entangled.

Select the appropriate clothing for each task, for example:

- Wear fire-resistant clothing when welding, flame cutting, or using an angle grinder
- Tear-resistant clothing must resist damage from sharp edges in the steel structure
- Wear anti-static clothing when working on electrical circuits so that components do not get damaged by a discharge of static electricity
- When working with lubricants, clothing must prevent direct skin contact with the lubricant
- Choose the clothing with consideration to the temperature at the working site

Fall protection

While personnel are doing installation, inspection, or maintenance work at heights, they must follow fall protection procedures as required by local regulations. Fall prevention practices and fall protection equipment aim at protecting personnel working on or around the equipment from exposure to falls.

If the equipment does not have a service platform or guardrail, personnel must use a properly fitted safety harness. The safety harness is attached to the dedicated fixing points on a building or equipment in order to prevent falls.

If the product does not have dedicated fixing points for fall protection, it is the owner's responsibility to make sure that suitable and secure fixing points are available or provide an appropriate manlift.

If ladders must be used, personnel must practice setting and securing the ladders before using them for actual work.

Fall protection system has four components:

- **Safety harness:** Safety harness helps to prevent employees to get hurt in a fall.
- **Lanyard belt:** Lanyard belt is connected to the anchor point and is attached to the safety harness. Lanyard belts are shock absorbing, which means that they slow down and eventually stop a fall.
- **Snap hook:** Snap hooks connect the D-ring to the safety harness. Snap hooks must be double locking. The basic rule is: connect only one snap hook to one D-ring.
- **Anchorage point:** Anchorage point is the point to which personal fall protection equipment is attached. The point must be capable of supporting at least 2,268 kg (5,000 lb) per employee. If there is any doubt about the strength of the attachment point, find an alternative point that can support the worker.

A typical fall protection program may include:

- Documented and established site policies and procedures
- Conducting site assessments for fall hazards
- Selection of the proper fall protection system and equipment
- Training on fall protection procedures and the proper use of fall protection systems
- Inspection and proper maintenance of fall protection equipment
- Measures to prevent falling objects
- Rescue plans

If necessary, contact your supplier or service organization for assistance with designing your fall protection program.

Copyright © (2016) Konecranes. All rights reserved.

2.2.4 Incident reporting

Product safety issues that you must report are events in which the manufacturer's product has been involved in an accident or near-miss incident. Contact your local manufacturer's representative immediately to report any safety-related feedback, such as unauthorized modifications, missing manuals and safety labels, neglected maintenance, or misuse.

Reporting is mandatory to ensure safe working conditions for employees, to provide information for the risk assessment process, and to initiate product improvements.

2.3 Limitations of the product

2.3.1 Operating conditions

BOXHUNTER crane is designed to operate in the following ambient conditions:

Table 1. BOXHUNTER crane operating conditions

Operating condition	Value
Operating environment	For outdoor usage
Ambient temperature	+0°C (32°F) ... +45°C (113°F)
Relative humidity	Up to 100%
Maximum operating wind speed	22 m/s
Maximum out-of-service wind speed	44 m/s
Maximum inclination angle of gantry runway	2 %
Class of utilization	U7 (2 million cycles)
Rated load under spreader	40.6 metric tons / 40 LT
Protection class	IP55
Ex-proof	No

2.3.2 Inclination angles

The maximum inclination angle for the RTG crane is 2%. This means that the maximum gradient of the gantry travel runway must not exceed 2% in any direction.

2.3.3 Prohibited use

WARNING! MACHINE MALFUNCTION HAZARD

Using the equipment outside the limits of its duty class or operating conditions could cause malfunction of the equipment and could lead to death, severe injury, or property damage.

Do not use the equipment outside the limits of its duty class or operating conditions.

The prohibited use of the equipment includes, but is not limited to:

- Neglecting safety messages of the indicating devices
- Working during incipient heavy storm or neglecting a storm warning
- Using the equipment to lift persons
- Lifting unbalanced or manually attached load against the operating instructions
- Pushing containers or other obstacles with a machine
- Pulling objects without lifting them up

Copyright © (2016) Konecranes. All rights reserved.

- Colliding the crane against an obstacle
- Colliding the spreader or the load against an obstacle
- Escaping from the crane to unsafe direction or area
- Standing under a hanging load
- Moving unexpectedly into the operating range of the equipment

For more information, see *Technical data* and *Operating conditions*. Contact the manufacturer or the manufacturer's representative in case of doubt.

2.3.4 Changes to the product

WARNING

MACHINE MALFUNCTION HAZARD

Unauthorized changes or modifications to the product could lead to death, severe injury or property damage.

Always contact the manufacturer to get advance written approval for any product change or modification.

All modifications and corrections not authorized in the product manuals or which may affect the maintenance, operation, safety, and availability of the product need to be approved in writing by the manufacturer before implementation. Approval requires risk assessment taking into consideration any new risks that the changes and modifications may bring.

Changes and modifications without proper risk assessment, elimination or reduction of risk and without appropriate safety measures may lead to death, serious personal injuries or damage to property or environment. Unauthorized modifications will also void the warranty.

If a modification or correction as described above has been implemented without the manufacturer's permission, its effect on warranty liability will be considered case-by-case. Thus, the warranty application may be rejected altogether. Should you consider a modification or alteration necessary, you must contact the organization that manufactured and designed the product. No modification is permitted unless you first obtain the written approval of the manufacturer.

2.4 Danger zone

DANGER

CRUSHING HAZARD

Persons moving within the danger zone of the crane could become crushed by a falling load or moving machinery. This will cause death or serious injury.

Never enter the danger zone while the BOXHUNTER crane is operating. Before starting and while operating the crane, make sure that there are no unauthorized persons on the crane or on the runway.

Copyright © (2016) Konecranes. All rights reserved.

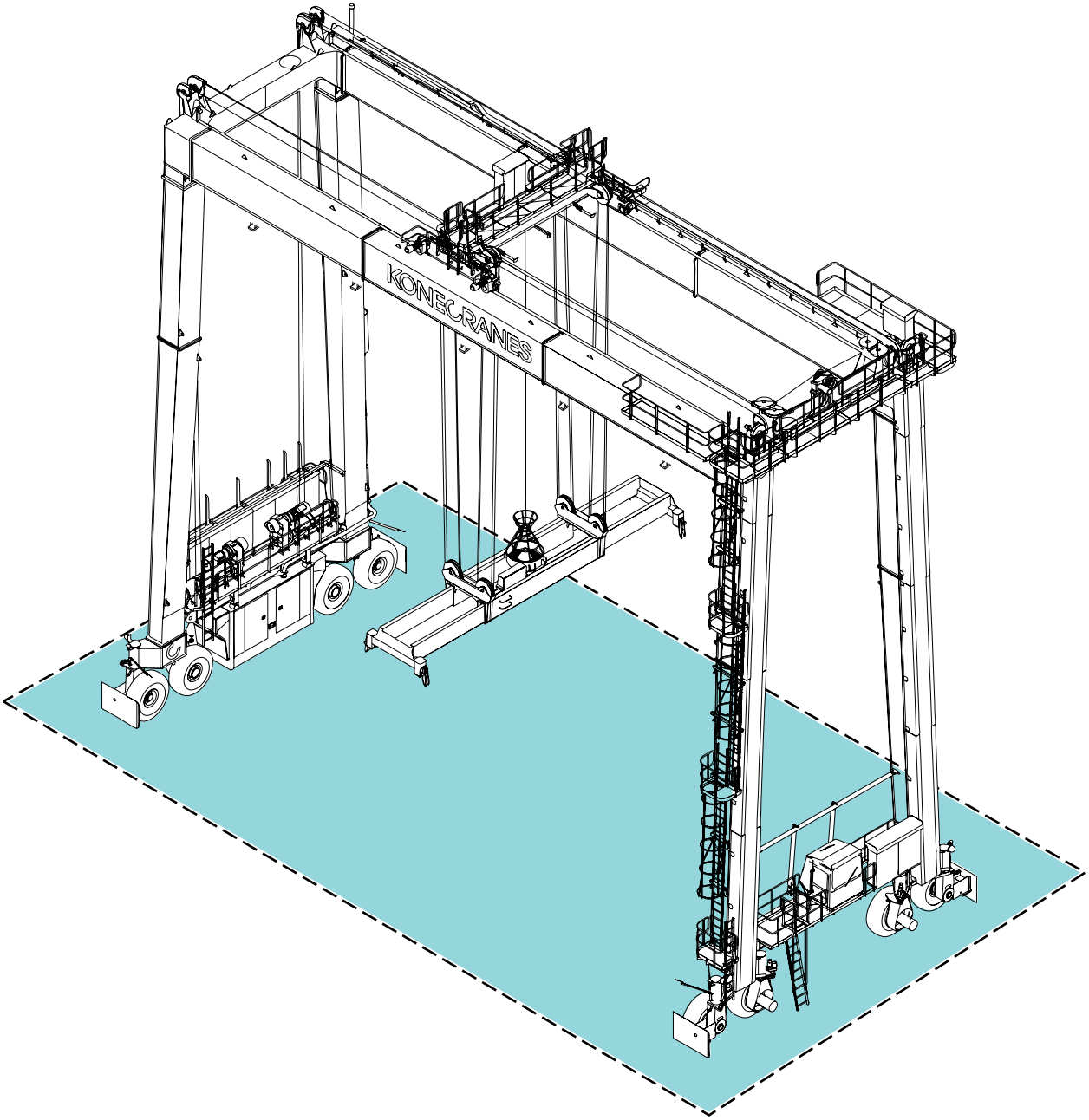

Figure 1. BOXHUNTER danger zone

2.5 Safety devices

WARNING! MACHINE MALFUNCTION HAZARD

Removing or modifying the safety devices could cause malfunction of the safety devices, which could lead to death, severe injury, or property damage.

Do not remove or modify any safety devices on the equipment without written approval from the manufacturer.

2.5.1 Visual and audible safety signals

At each corner of the crane gantry, there are visual warning beacons on the bogies. The beacons flash automatically during all gantry travel motions to warn other personnel.

Audible warning signal sounds automatically during all gantry travel motions to warn other personnel.

Copyright © (2016) Konecranes. All rights reserved.

2.6 Protective measures

2.6.1 Emergency stopping

WARNING! UNCONTROLLED MOVEMENT HAZARD

Emergency stopping could cause the equipment to move or operate in an uncontrolled manner. This could lead to death, severe injury, or property damage.

Only use the emergency stop button in an emergency situation.

In case of equipment malfunction or other emergency situations, you can stop all motions immediately by pressing the red emergency stop button. In normal operation, do not use the emergency stop button. Instead, use the direction controls. Routinely using the emergency stop button increases wear on the product.

NOTE ***Do not operate the equipment unless you know the location of the emergency stop button.***

There are two main types of emergency stop buttons:

- Emergency stop button with a twist-release mechanism which latches in the activated position
- Emergency stop button with a push-pull mechanism which remains pushed in

To reset the latching type of an emergency button, twist the button in the direction of an arrow in the mushroom head. The rotating movement releases the latch and allows the button to spring out to the normal reset position.

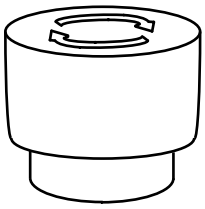

Figure 2. Emergency stop button with twist-release mechanism

To reset the push-pull type of emergency stop button (without a rotation arrow on the button head), pull the button manually outwards to the normal reset position.

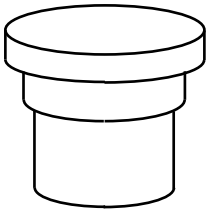

Figure 3. Emergency stop button with push-pull mechanism

Restarting the equipment and the operation controls is possible only after the emergency stop button has been reset to the normal reset position.

Copyright © (2016) Konecranes. All rights reserved.

2.6.2 Emergency stop locations

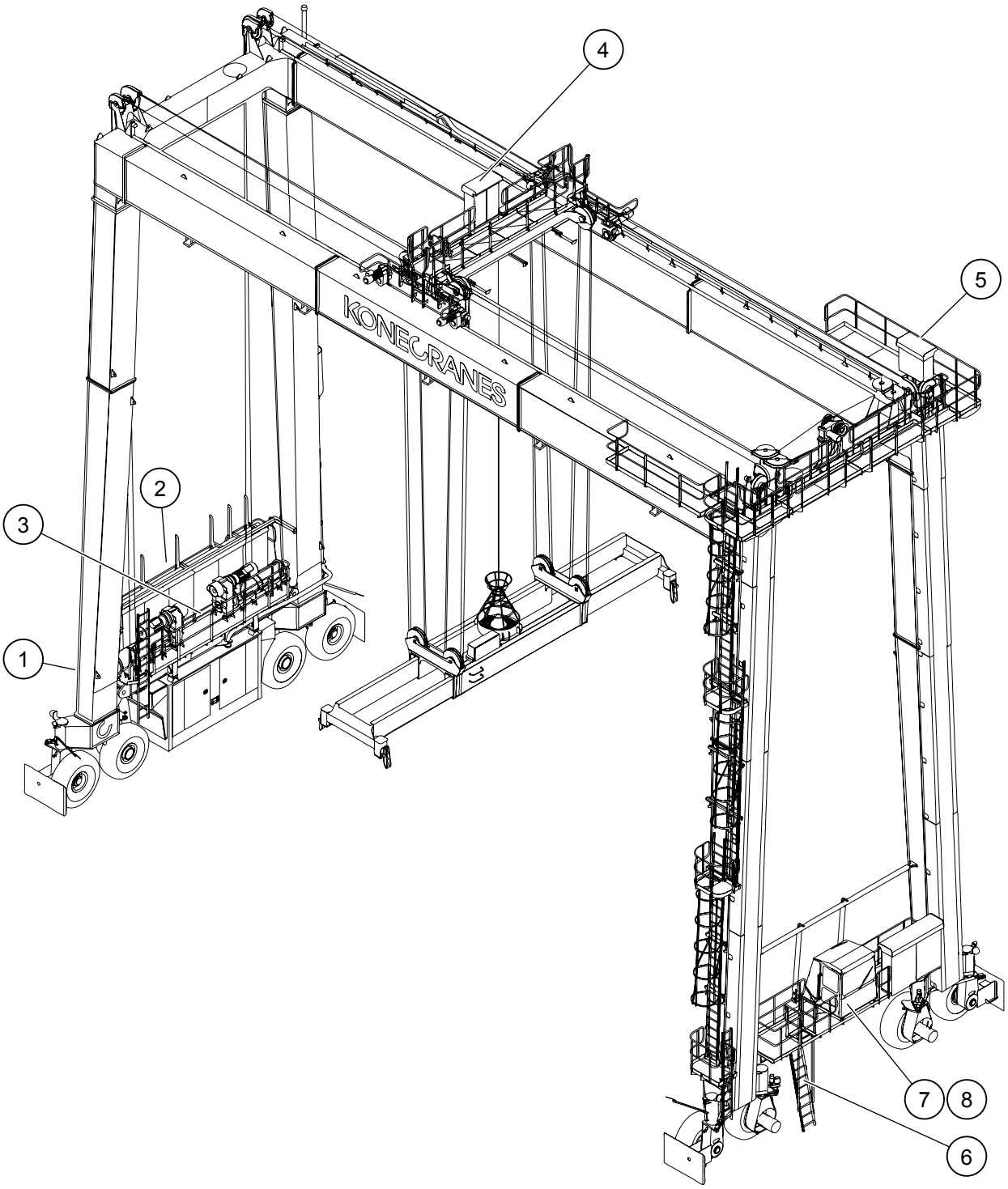

Figure 4. BOXHUNTER crane emergency stops

Copyright © (2016) Konecranes. All rights reserved.

The BOXHUNTER crane emergency stop buttons can be found at the following locations:

Location		Description
1	Ground level - diesel alternator set	On the outside of the enclosure, on the left side from the enclosure doors.
2	Electrical equipment cubicle row	On the outside of the control cubicle E1.2.
3	Hoisting machinery	Between the two hoisting machinery units, mounted on the guardrail.
4	Trolley - electrical equipment cubicle	On the outside of the cubicle, on the top left corner of the cubicle door.
5	Skew machinery - electrical equipment cubicle	On the outside of the cubicle, on the top left corner of the cubicle door.
6	Cabin ladders	On the right side of the ladders (about 1.5 m above the ground).
7	Operator's cabin	Inside the cabin, on the dashboard.
8	Operator's cabin	Inside the cabin, on the controller (on the right side of the controller).

Table 2. BOXHUNTER diesel emergency stops

Location		Description
1	Ground level - diesel alternator set	On the outside of the enclosure, on the right from the enclosure doors.
7	Operator's cabin	Inside the cabin, on the cabin dashboard.

NOTE ***The main isolator switch for crane and the main isolator for machineries are located inside the diesel alternator enclosure (pos.1 in the figure), on the local control station.***

2.6.3 Main isolation switch

You can only operate the product when power is turned on. BOXHUNTER crane has two main isolation switches, one for main supply and other for machineries. In addition, there is a battery switch inside the diesel alternator enclosure.

NOTE ***Do not operate the product unless you know the location of the main isolation switches and the battery switch.***

DANGER

ELECTRICAL SHOCK HAZARD

Even though you turn off both main isolation switches, there is still high voltage present in the crane, if the shore power is connected. This results in exposure to electrical shocks, which will lead to death or serious personal injury.

Always ensure that the electricity is totally disconnected in the area where you carry out the maintenance operation. Follow the lockout/tagout/tryout procedure.

Copyright © (2016) Konecranes. All rights reserved.

DANGER

ELECTRICAL SHOCK HAZARD

Even though one switch is turned off, there may still be voltage present in some parts of the product. This results in exposure to electrical shocks, which will lead to death or serious personal injury.

Be aware of the main isolation switch and battery switch functionalities.

WARNING

SWINGING LOAD HAZARD

Turning off the main isolation switch causes sudden loss of power. The sudden loss of power could cause the load to swing, which could lead to death, serious personal injury, or damage to the product or load.

Avoid turning off the main isolation switch during load movement.

Main isolator switch for crane

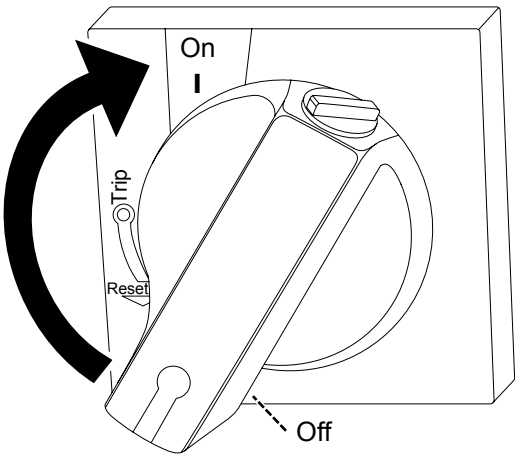

Main isolator switch for crane is the main circuit breaker for all electricity in the crane. The main isolator switch for crane is located on the local control station of the diesel alternator set.

When you turn **On** the main isolator for machineries (after it has been in the **Off** position), perform the pre-start checks before using the product. For more information, see *Checks before operating the crane*.

WARNING! MACHINE MALFUNCTION HAZARD

If the main isolator switch for crane is in the Trip position, a short circuit has likely occurred in the system. Continuing with crane operations could lead to death, serious personal injury, or property damage.

Do not use the crane until you have found out reason for tripping. Call for maintenance assistance.

NOTICE

MACHINE MALFUNCTION HAZARD

Do not turn off the main isolator switch for crane unless you have a valid reason for it.

Copyright © (2016) Konecranes. All rights reserved.

Main isolator for machineries

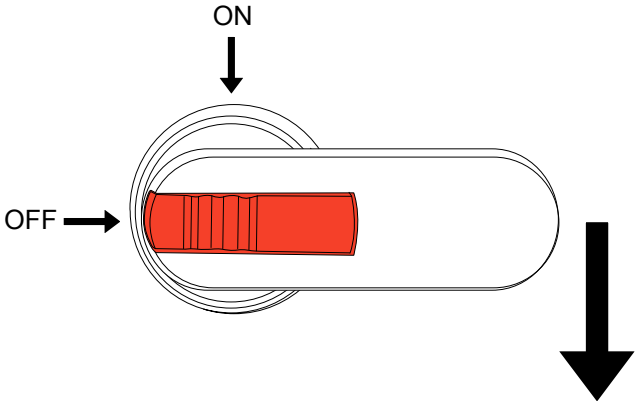

Figure 5. Main isolator for machineries

Main isolator for machineries is the power switch for the machineries running the crane operations. It is located in the local control station of the diesel alternator enclosure, next to the main isolator switch for crane.

When you turn **ON** the main isolator for machineries (after it has been in the **OFF** position), perform the pre-start checks before using the product. For more information, see *Checks before operating the crane*.

NOTICE

MACHINE MALFUNCTION HAZARD

Do not turn off the main isolator for machineries unless you have a valid reason for it.

Battery switch

Battery switch inside the diesel alternator enclosure separates the alternator battery from the diesel engine. It is used, for example, by the maintenance personnel to ensure that the diesel engine is not accidentally started up during the service operations.

You can switch off the battery switch by turning the handle inside the diesel alternator enclosure.

NOTICE

MACHINE MALFUNCTION HAZARD

Do not turn off the battery switch unless you have a valid reason for it.

2.6.4 Lockout-tagout-tryout procedure

Before installation, inspection, and maintenance, the power sources must be de-energized, isolated, locked out, and tagged out. Lockout-tagout-tryout procedures are primarily intended to protect personnel by preventing accidental starting of the machinery or exposure to electric shocks.

Follow the lockout-tagout-tryout procedures in accordance with the local regulations and the documented site lockout-tagout-tryout policy. The owner must ensure that the operators are fully aware of the applicable lockout-tagout-tryout practices.

The following items are normally included in the documented lockout-tagout-tryout policy:

- Communication requirements: who to inform before using lockout-tagout
- When the use of lockout-tagout is permitted
- Identification of each of the switches, controls, valves, and other energy isolating devices present at the site. Role of each device should also be explained.
- Lockout-tagout sequences to be followed before, during, and after maintenance
- Safety and operational considerations regarding other products on the same runway or on adjacent runways

Copyright © (2016) Konecranes. All rights reserved.

WARNING! STORED ENERGY HAZARD

When the equipment is switched off, there may still be stored energy in the electrical, hydraulic, or pneumatic systems, rotating parts, linearly moving parts, or in the load. Unintended release of energy could cause death, severe personal injury, or property damage.

Prevent the unintended release of energy by following the approved lockout-tagout-tryout procedures.

WARNING! MACHINE MALFUNCTION HAZARD

Operating the product while it is under installation or maintenance could lead to death, severe personal injury, or property damage.

Never attempt to operate a control, switch, valve, or other device when it is locked out or tagged out.

To lock out, tag out, and try out the equipment:

1. *Turn off the equipment and disconnect power.*
2. *Place a personal lock and tag on controls to prevent their use until you remove the lock.*
3. *While performing the work, always keep the key to the lock with you.*
4. *If more than one person locks out the same machine, use individual locks and approved multi-lock devices.*
5. *Verify the absence of voltage with an approved voltage test equipment.*
6. *Verify the isolation of other forms of energy with an approved method.*
7. *Attempt to operate the machine or equipment using normal controls. If properly isolated or immobilized, no equipment or system starts nor any part activates or moves.*
8. *Release energy (pneumatic or hydraulic pressure or other stored energy) that may cause a hazardous situation during the work in a safe way.*
9. *After completing the work, remove all locks and tags.*

2.6.5 Releasing the air pressure

WARNING

HIGH PRESSURE HAZARD

Release of high-pressured air could cause death or serious injury.

Proceed with caution when working with pressured air systems. Use approved personal protective equipment. Follow all safety requirements.

Pressured air systems are normally equipped with a relief valve which automatically releases the pressure to prevent overpressure in the system. If the air system is equipped with air receivers, it takes longer to depressurize the system.

In spite of the precautionary measures, the system may include subsystems, from which pressure has not been released.

Always use approved personal protective equipment when performing any maintenance work.

Copyright © (2016) Konecranes. All rights reserved.

2.6.6 Fire safety

⚠ WARNING

FIRE AND EXPLOSION HAZARD!

Ignition sources like smoking, open flames, welding work and sparks together with combustible materials like fuel, can cause fire and if not avoided, could lead to death or severe injury.

Ignition sources are prohibited in the vicinity of the machine.

During maintenance appropriate fire prevention and protection measures must be followed including but not limited to trained personnel, proper fire extinguishing equipment and agents. Before any maintenance or repairs requiring ignition sources like welding or flame cutting, a proper risk assessment must be carried out before the start of the work to control the risk.

Smoking and open fire are prohibited in the vicinity of the product. Access to all fire-fighting equipment must be granted always, especially during maintenance and repair works.

All fire-fighting equipment must be inspected and serviced regularly, according to local regulations. Damaged fire-fighting equipment and used fire extinguishers must be replaced immediately.

Know the various types of fires and the appropriate fire-fighting methods. Many types of fires must not be extinguished with water. In most cases, special extinguishing agents, dry powders, or deoxygenating are required.

All personnel must be trained regularly in fire-fighting methods, in cooperation with local authorities and rescue organizations. In case of fire, the fire alarm must be activated and all available personnel must contribute in the fire-fighting according to the predetermined fire plan of the workplace.

Fire extinguishers

WARNING! FIRE HAZARD

Attempting to extinguish the fire could lead to death or severe injury.

First, call for help. Then attempt to extinguish the fire using the hand equipment provided. The primary role of all personnel is to evacuate the machine and to avoid the loss of life or severe injuries.

Hand-operated fire extinguishers are positioned at several locations on the crane. Fire extinguishers are suitable for extinguishing small localized fires.

Extinguishers are either of the "Dry Chemical Powder" type or the "CO_2" type. Either type of extinguisher is suitable for use on electrical fires and on diesel fuel or lubricating oil fires.

Locations of fire extinguishers

Fire extinguishers are mounted on the following locations in the BOXHUNTER crane:

Copyright © (2016) Konecranes. All rights reserved.

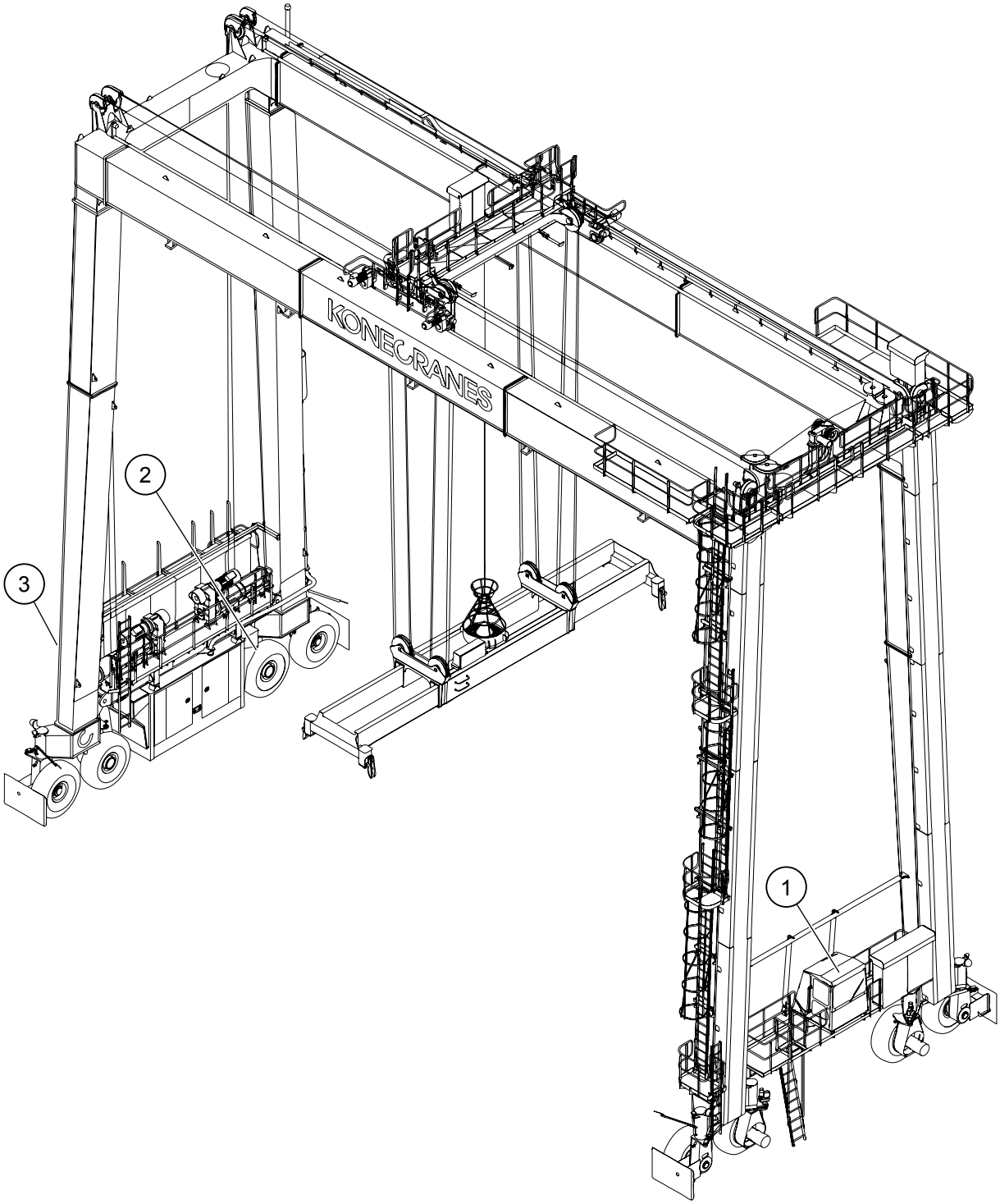

Figure 6. Locations of fire extinguishers

1. *Inside the cabin*
2. *Outside diesel alternator enclosure, the right corner (next to the bogie C)*
3. *On the right side of the electrical equipment cubicle row.*

Copyright © (2016) Konecranes. All rights reserved.

2.7 Emissions

2.7.1 Noise

⚠ WARNING

NOISE HAZARD

Prolonged exposure to noise above 80 dB(A) could cause hearing impairment.

Wear approved hearing protectors.

Measured sound levels

Sound pressure levels of the BOXHUNTER crane in operation are presented in the following table. The declared emission levels are A-weighted, equal levels, and calculated or measured from an operation period that contains at least ten complete cycles.

The measurements and calculations have been done according to SFS-EN ISO 4781, EN ISO 3746, EN ISO 11202, and SFS-EN15011.

Table 3. BOXHUNTER average sound pressure levels during operation

Equivalent, sound pressure level L_{pa} (re 20µPa), dB(A)	BOXHUNTER crane with diesel alternator set
At ground level, 50 m (164 ft) from the crane, between the gantry legs	70 dB(A)
In the operator's cabin	-
Uncertainty, Kwa, in decibels	3 dB

2.7.2 Vibration

The daily whole-body vibration level of the crane operator does not exceed 0.5 m/s^2, when calculated for a four-hour daily operating period.

According to the EU Vibration Directive 2002/44/EC, the daily exposure limit value of whole-body vibration, standardized to an eight-hour reference period, is 1.15 m/s^2.

2.8 Personnel requirements

⚠ WARNING

SPECIALIST SKILLS REQUIRED

Incompetent operation and maintenance procedures could cause death or severe injuries.

Operation and Maintenance procedures require professional skills and special training regarding the tasks and working methods.

Do not operate the equipment or do any maintenance tasks without proper training. Always follow the instructions. Use appropriate personal protective equipment, depending on the task.

Copyright © (2016) Konecranes. All rights reserved.

To avoid hazardous situations and dangerous consequences, leave all operation and maintenance work to professionals. Tasks mentioned here below are examples of tasks which are allowed only for trained personnel. More details on the risks related to the tasks and instructions for carrying out these tasks safely can be found in the chapters where the procedures are instructed. Tasks that require special technical skills and training include, but are not limited to:

1. *Hydraulic system maintenance*
2. *Pneumatic system maintenance*
3. *Electric system maintenance*
4. *Battery maintenance*
5. *Tire maintenance*

2.9 Environmental information

Environmental impacts have been taken into account in designing and manufacturing this product. To prevent environmental risks during use, follow the instructions and local regulations for disposal of waste material. Proper use and maintenance improve the environmental performance of this product.

2.9.1 Product life cycle stages

Product life cycle stages include:

- Production of materials and components
- Equipment manufacturing and assembly
- Use phase, including maintenance and modernization
- Dismantling and recycling of waste materials
- Deliveries between each stage

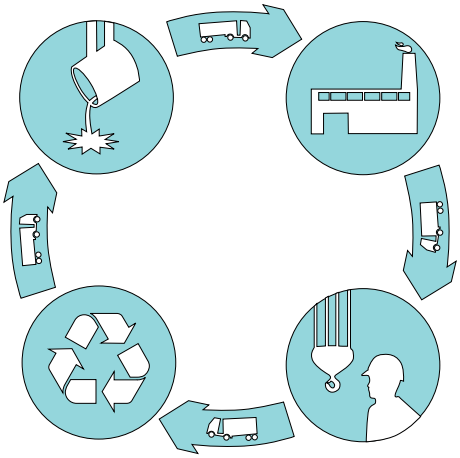

Figure 7. Product life cycle stages

2.9.2 Handling waste material

Handle and dispose of the waste material from installation, maintenance, or dismantling according to local regulations. From the sustainability point of view, the preferred waste handling methods are reuse, recycle as material, energy recovery and, as a final resort, safe disposal.

As waste regulations and types of recovery and disposal methods vary regionally, no common, detailed guidance can be given. The following list provides proposals for adequate waste handling methods.

NOTE ***Always use licensed recycling companies.***

Copyright © (2016) Konecranes. All rights reserved.

Table 4. Waste handling methods

Material	Waste handling method
Metals	Recycle the metals.
Electronics and electromechanical components	Some electrical parts may be treated as hazardous waste. Collect and recycle the electronics and electromechanical components separately.
Batteries	Batteries and other energy storage components may contain hazardous substances. Collect these items separately and recycle according to local regulations.
Plastics	Recycle plastic as material, use it for energy recovery, or deliver it to a landfill site.
Chemicals	Never spill chemicals, such as oil, grease, and other liquids, onto the ground, soil, or sewage. Store waste oil and grease in containers that are indicated for the purpose. More detailed information on chemical handling as waste can be found in the chemical's safety data sheet that is available from the manufacturer of the chemical.
Packing materials	Reuse or recycle packing materials, such as plastics, wood, and cardboard.
Rubber	Recycle rubber according to local regulations. Whenever possible, return the used rubber tires to the tire supplier for recycling.

Copyright © (2016) Konecranes. All rights reserved.

3 PRODUCT DESCRIPTION

The following illustration gives an overview of the main components of the BOXHUNTER rubber-tired gantry crane.

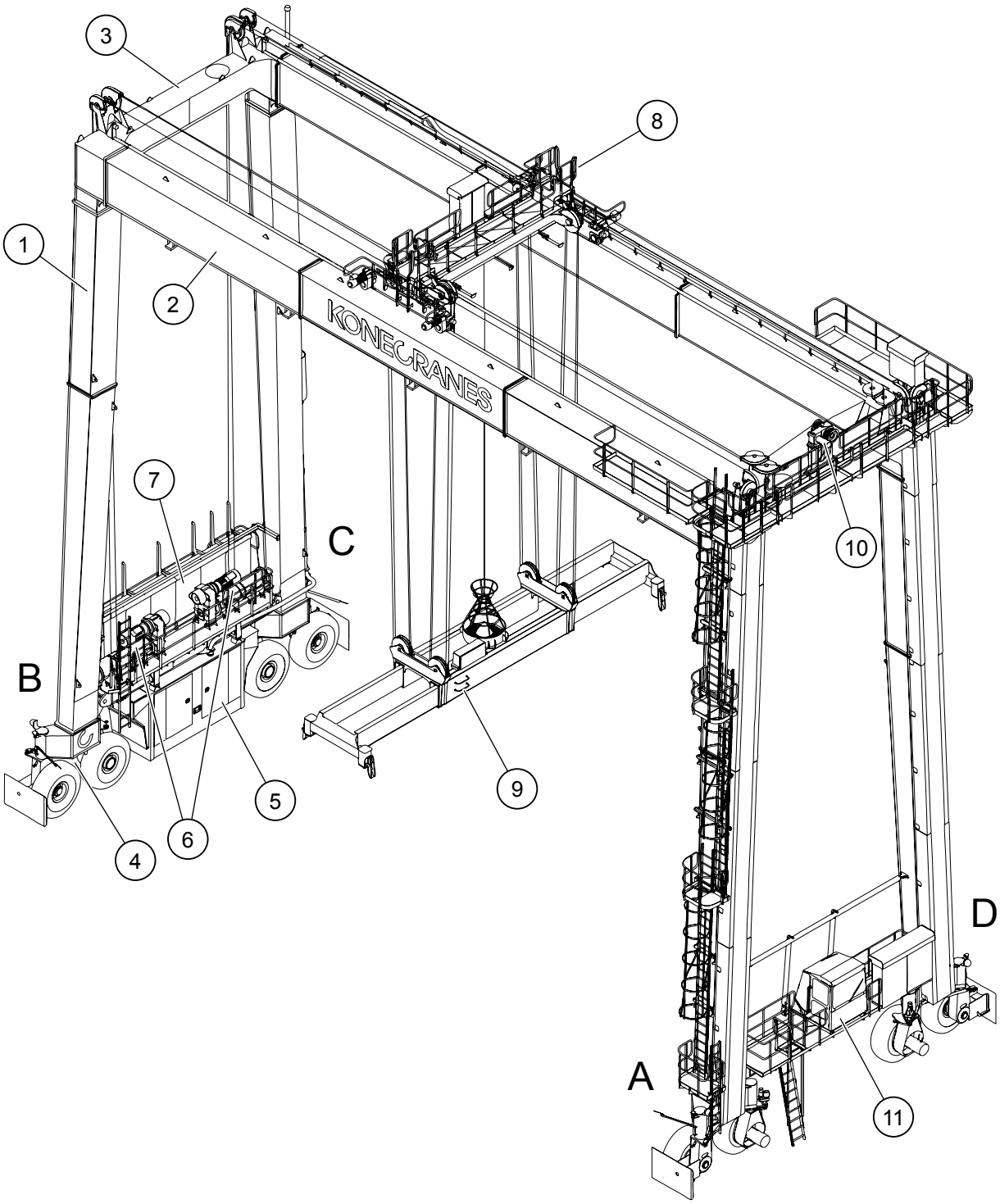

Figure 8. BOXHUNTER layout

1. *Gantry leg (identified as A, B, C and D)*
2. *Main girder*
3. *Top beam*
4. *Bogie (wheel pair)*
5. *Diesel alternator set*
6. *Hoisting machinery units*
7. *Electric equipment cubicle row*
8. *Trolley*
9. *Spreader*
10. *Skew machinery*
11. *Operator's cabin*

Copyright © (2016) Konecranes. All rights reserved.

BOXHUNTER crane is a mobile rubber-tyred gantry crane that is designed for handling standard containers within the stacking areas of a container terminal.

BOXHUNTER crane is run by its own diesel alternator set to provide electrical power for all motions and hoist drive motors.

Shore power can be connected to the electrical services (for example lightning, heating and air-conditioning), but only while the crane is shut down and parked.

BOXHUNTER crane is operated by one person. It does not require the assistance of a rigger to attach a container to the spreader. The crane is equipped with floodlights to allow continued safe lifting operations during the night time or when the general visibility is poor.

3.1 Technical data

Table 5. BOXHUNTER technical data

Description	Values
Number of wheels	8 wheels
Weight	Approximately 130 t (metric tons)
Lifting capacity	40.6 t (metric tons)
Lifting height	1 over 5
Span	6 + 1 truck lane
Power supply	Diesel alternator set (max 330 kW)
Hoisting speed	With the empty spreader: 52 m/min 35 t: 26 m/min 40.6 t: 23 m/min
Trolley traverse speed	70 m/min
Gantry travel speed	With the empty spreader: 130 m/min, cross mode 52 m/min

3.1.1 Classification of BOXHUNTER crane mechanisms

Table 6. Classification of crane mechanisms according to F.E.M. 1.001

Mechanism	Min. life	Class of operation	Load spectrum	Classification
Hoist	25,000 h	T7	L2	M7
Trolley traverse	25,000 h	T7	L2	M7
Gantry travel	6,300 h	T5	L2	M5

It is the responsibility of the owner to ensure that the product is used according to the classification that it has been designed for. If there are significant permanent changes in the product usage, authorized service personnel must revise the duty class and DWP (Design Working Period) as necessary. Revising the duty class and DWP may require changes to the hardware or servicing frequency.

Copyright © (2016) Konecranes. All rights reserved.

WARNING! MECHANICAL MALFUNCTION HAZARD

Using the product outside its limits raises the risk of mechanical failure, which can shorten the product lifetime. Machine malfunction could lead to death, severe personal injury, or property damage.

Do not allow the product to be used outside the limits of the specified classification.

3.2 BOXHUNTER main operations

The main operations of the BOXHUNTER crane include the following:

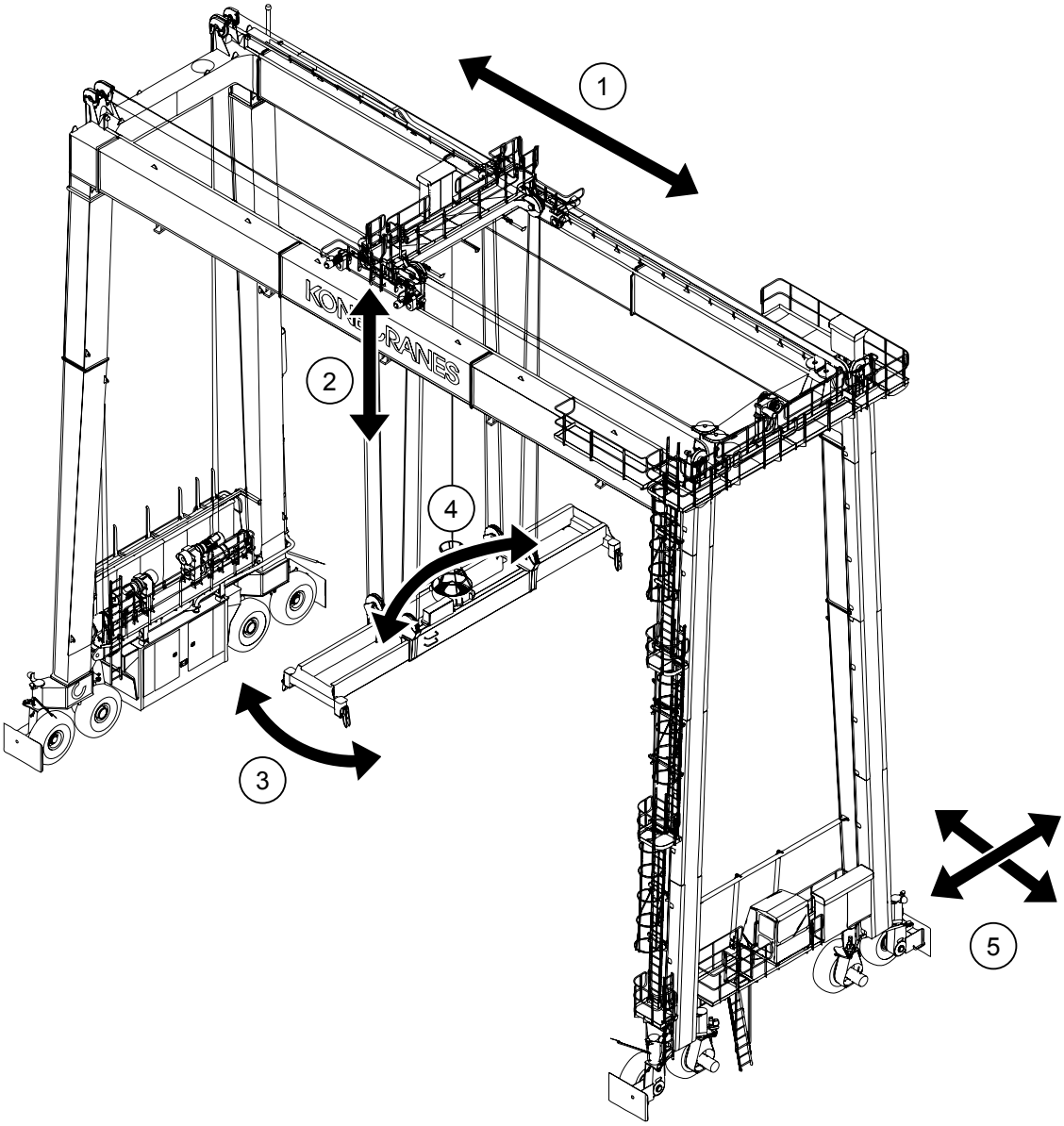

Figure 9. BOXHUNTER main operations

1. *Trolley traversing*
2. *Lifting and lowering the load*
3. *Spreader skew*
4. *Hoist trim*
5. *Gantry long and cross travel*

Tasks related to these operations are described in chapter *Operating Instructions.*

Copyright © (2016) Konecranes. All rights reserved.

3.3 Main diesel alternator set

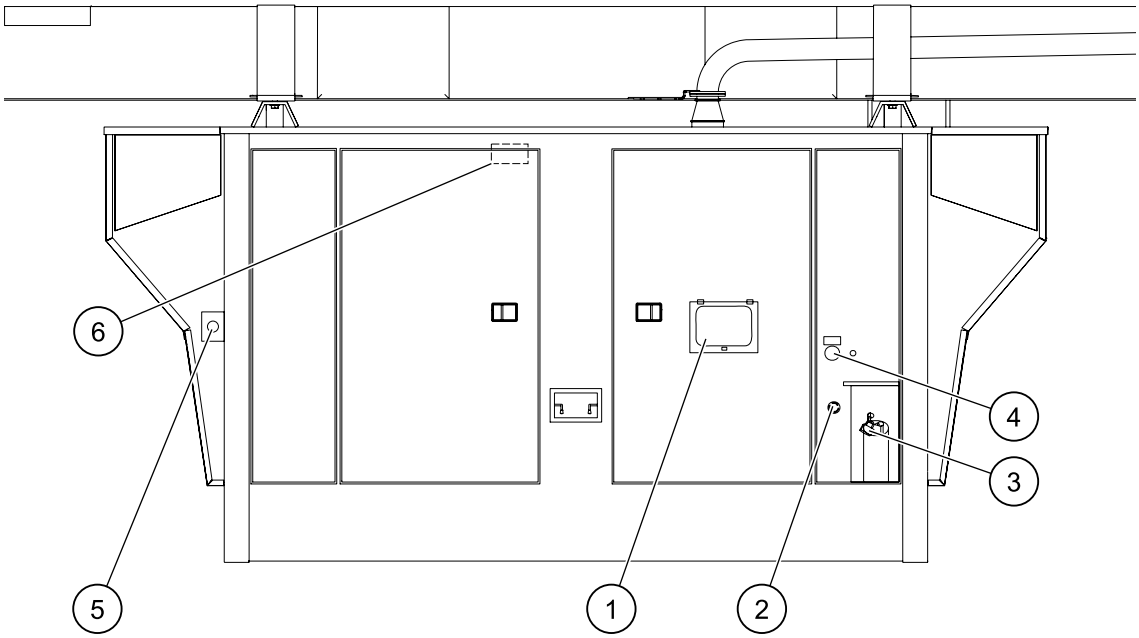

Figure 10. Main diesel alternator set

1. *Local control station*
2. *Diesel emergency stop*
3. *Fuel cap*
4. *Fuel level measuring meter (with a push-button on the right side)*
5. *Emergency stop*
6. *Mechanical limit switch (behind each door)*

Main diesel alternator set is the main power source for the BOXHUNTER crane.

Main diesel alternator enclosure is located under the electrical equipment cubicle row (under the machinery side sill beam).

Electronic system monitors the engine and the speed governor. The engine is water-cooled with an auxiliary fan that cools the engine and the alternator. There is a local control station at the enclosure, and a diesel emergency stop outside the enclosure doors, next to the fuel cap. There is also an emergency stop at the side of the enclosure.

Mechanical limit switch behind each door indicates the PLC system if any door is left open, and the PLC system prevents the operator from moving the crane until all doors are closed.

Diesel start, stop and emergency buttons are also available on the cabin dashboard.

Copyright © (2016) Konecranes. All rights reserved.

3.3.1 Local control station of the main diesel alternator set

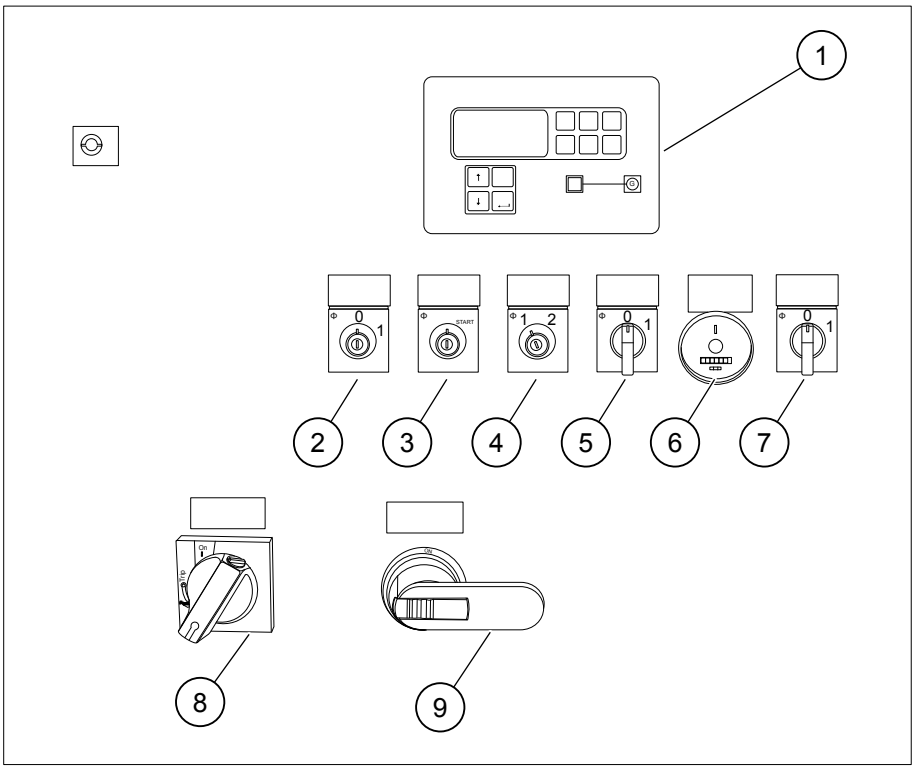

Figure 11. Local control station

1. *Control panel with a display (includes the diesel start and stop push-buttons)*
2. *OFF/ON key (for the local control station)*
3. *Spare*
4. *Remote Control (1=local control, 2=remote control)*
5. *Generator Heater (0=OFF, 1=ON)*
6. *Engine Running Hour Counter*
7. *Engine Heater (0=OFF, 1=ON)*
8. *Main isolator switch for crane*
9. *Main isolator for machineries*

Copyright © (2016) Konecranes. All rights reserved.

3.4 Gantry

3.4.1 Gantry steel structure

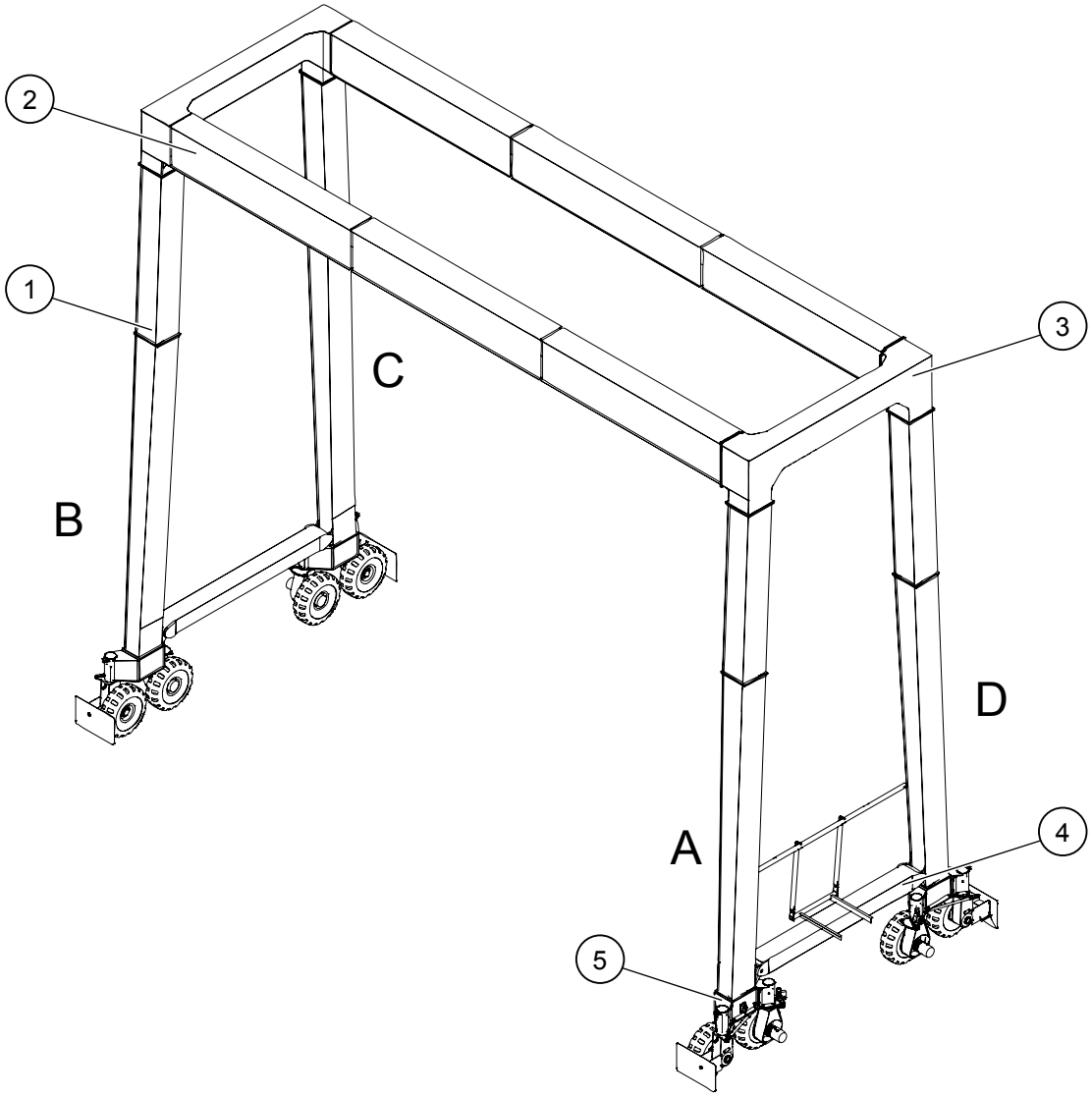

Figure 12. Gantry steel structure

1. *Gantry leg (A...D)*
2. *Main girder*
3. *Top beam*
4. *Sill beam*
5. *Bogie steel structure*

BOXHUNTER gantry steel structure consists of two main girders, four legs, two top beams and two sill beams. Each main girder consists of three sections that are attached to each other and the legs with bolted flange joints. There is a rail that is welded onto the top of both main girders at their inner edges to support the trolley wheels.

Gantry legs are slightly inclined with a horizontal sill beam between the lower parts of the legs. Legs A and D are locating at the ends of the cabin side sill beam and the legs B and C at the ends of the machinery side sill beam. Top beam joins the upper parts of the legs to the main girders. Each leg end has a bogie (a pair of pneumatic tired wheels). Bogie steel structure is connected to the lower end of the leg through a bolted joint.

Copyright © (2016) Konecranes. All rights reserved.

The beams and the box girders are fabricated as welded subassemblies that are bolted and pinned together during the crane erection.

3.4.2 Bogies

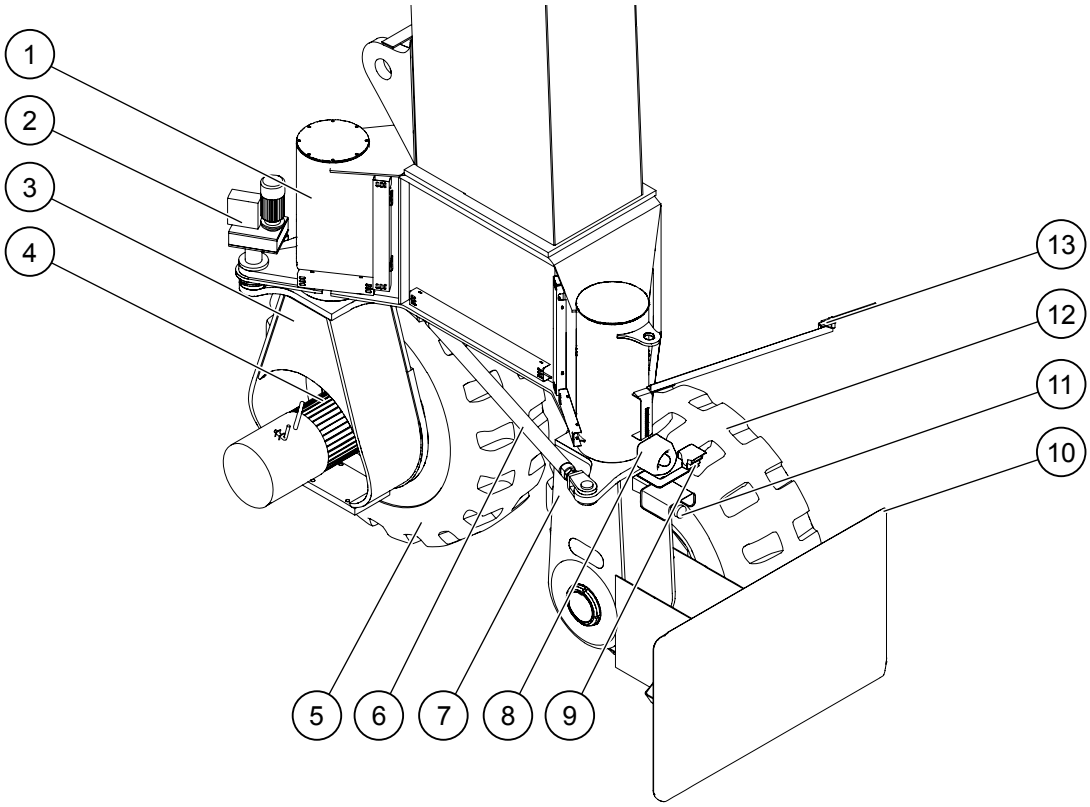

Figure 13. Bogie assembly (gantry legs B and D)

1. *Bogie steel structure*
2. *Swivel lock*
3. *Driving wheel support*
4. *Traveling motor*
5. *Driving wheel*
6. *Connecting tie rod*
7. *Idle wheel support*
8. *Audible warning beacon*
9. *Gantry camera*
10. *Wheel fender and chock*
11. *Ultrasonic sensor*
12. *Idle wheel*
13. *Catwhisker limit switch*

BOXHUNTER gantry is supported by eight pneumatic tired wheels, two wheels in line at each corner (a bogie). The wheel pair is mounted to a wheel support beam that is connected to the lower end of the gantry leg through a bolted joint.

In each bogie, one of the wheels has the machinery for the gantry travel motion and the other wheel is idle and supports half of the vertical corner load. Each bogie is equipped with an audible warning beacon for alarms, a gantry camera for gantry runway visualization, an ultrasonic sensor for gantry runway detection, and a catwhisker limit switch for avoiding collisions with container stacks.

For each bogie, there is a separate drive motor, a hub gear reducer, and a mechanical brake for the gantry travel motion.

During the gantry long travel and cross travel motions, the locking mechanism keeps the bogies and the gantry aligned. When the locking pins are released, it is possible to turn the bogies and thus change the gantry alignment (for example, from the long travel to the cross travel mode).

Copyright © (2016) Konecranes. All rights reserved.

3.4.3 Gantry travel

Gantry travel motions are as follows:

- Gantry long travel mode ("normal" mode)
- Gantry cross travel mode
- Gantry parking mode

In normal container stacking operations, the gantry travels only along the runway, in parallel with the sill beams. The crane collects containers from transport vehicles in the truck lane, or it dispatches existing containers from stacks to the transport vehicles. For these operations, the gantry is only required to move in either direction of the runway, that is, in the long travel mode.

When the gantry cross mode is used, it means that the gantry bogies are capable of traveling 90 degrees to the normal operating directions. In this mode, the trolley movement is normally prevented.

WARNING! MACHINE MALFUNCTION HAZARD

Gantry driving is not allowed when the foldable service platform is unfolded, or when the portable ladders are not placed in their hangers (the limit switches prevent the gantry from moving). Ensure that the machinery side sill beam ladder is placed to its hanger at proper height so that the wheels do not crush the ladders when turning into the cross travel mode.

Before you start driving the gantry, make sure that the foldable service platform is correctly stowed, and the portable ladders are placed in their hangers at correct height.

To enable different gantry travel motions, the gantry wheels swivel and lock for alternative arrangements which are shown in the following table.

Table 7. Gantry travel modes and the position of bogies

Gantry travel mode	Position of bogies
Gantry long travel In the normal gantry long travel mode, the bogies are aligned and locked so that they travel in parallel with the sill beams (that is, perpendicular to the main girders). When viewed from the operator's cabin seat, the gantry long travel directions are "Right" and "Left".	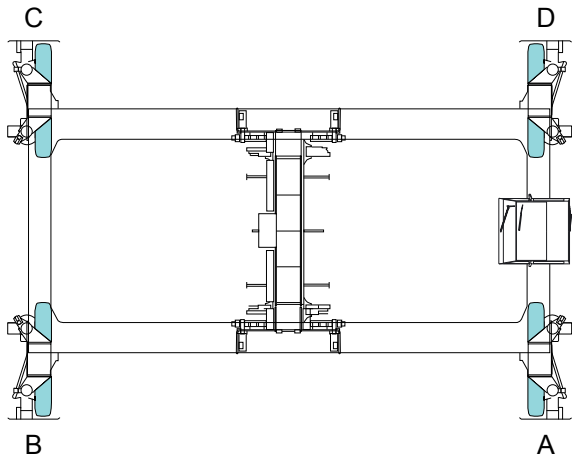

Copyright © (2016) Konecranes. All rights reserved.

Gantry travel mode	Position of bogies
Gantry cross travel In the gantry cross travel mode, the bogies are aligned and locked so that their traveling direction is along the axis of the main girders (that is, perpendicular to the sill beams). When viewed from the operator's cabin seat, the gantry cross travel directions are "Forward" and "Backward". Trolley traversing is normally prevented while the bogies are at the cross travel position.	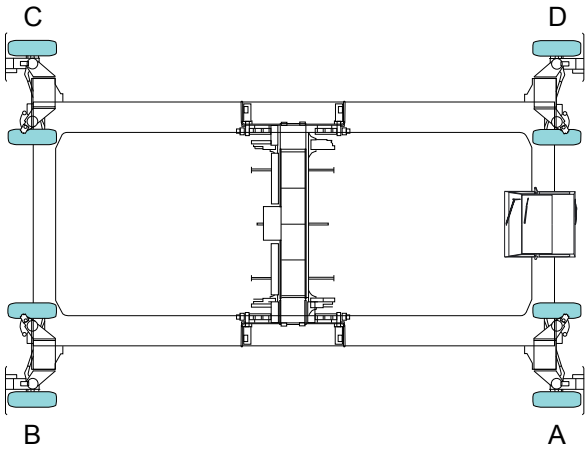
Gantry parking In the gantry parking, the bogies of two opposite diagonal corners of the gantry are aligned and locked at the cross travel position (bogies A and C). The other bogies (B and D) are at the long travel (normal) position. In this way, the gantry cannot move in any direction and the holding force is greater than that of the mechanical brakes of the bogies. If the mechanical brakes are released, for example, for maintenance work, while the gantry is in the parking mode, the gantry does not move (providing that the gantry is not parked on a sloping ground). For more information, see section *Parking the gantry*.	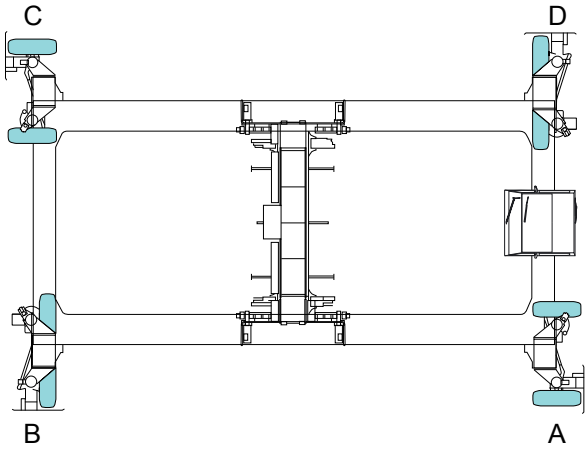

Collision avoidance

Collision avoidance detectors

BOXHUNTER crane is equipped with a collision avoidance system with ultrasonic sensors (detectors).

Each detector is mounted on a location where its function is not obstructed by any gantry structure.

If a detector senses an obstacle on the runway, the gantry travel motion slows down and finally stops, and the gantry travel motion is prevented to that direction. The crane can only travel away from the obstacle to the opposite gantry travel direction.

If the equipment causes a false collision detection when there is no obstruction, the maintenance personnel must repair the detector, or adjust its sensitivity. You can also bypass the detectors with a push-button on the controller, for more information on the bypass function, see *Recovering from a collision situation*. Bypass function should only be used on a temporary basis, maintain always the detectors in good working condition.

Copyright © (2016) Konecranes. All rights reserved.

WARNING! COLLISION HAZARD

Collision avoidance detectors are not considered a safety equipment and may not be used to ensure human safety.

Never use the collision avoidance detector as a method of stopping the crane when there are persons on the runway. Be constantly aware of the persons working in the gantry runway. In case of emergency, use the emergency stop buttons to stop the gantry movement immediately.

WARNING! COLLISION HAZARD

The violent emergency braking of the gantry travel motion puts unnecessary strain on the crane structure and machinery. A sudden crane movement could lead to death, severe personal injuries, or property damage.

Do not use collision avoidance detector as a normal device of stopping the gantry travel motion.

Sensitivity reduction during heavy rain

During heavy rain, the collision avoidance detectors may sense large rain drops as obstructions and stop the gantry travel.

Sensitivity of the collision avoidance detectors cannot be adjusted directly, but you can increase the sampling time interval during which the detections signal must remain active.

In this reduced sensitivity mode, the gantry travel stops only after a short delay (compared with the immediate stop with the normal sensitivity mode of the collision avoidance detectors), and therefore, the maximum speed of the gantry travel is limited. While the sensitivity reduction is in use, the gantry speed limitation depends on the sensitivity reduction level. The gantry stopping time also depends on this setting. The sensitivity reduction level is selected on the **Collision Avoidance** page on the operator panel (by adjusting the **Time Factor** scale on the page):

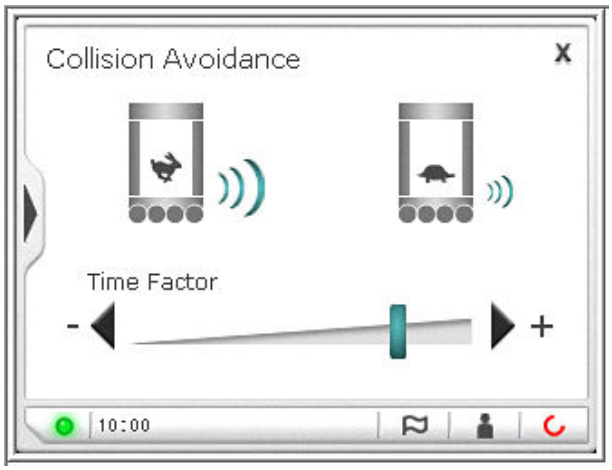

For more information, see section *Settings page*, *Collision Avoidance page.*

After one hour, the sensitivity reduction mode is automatically deactivated. The sensitivity reduction mode is also deactivated when you have set the drives off by pressing the emergency stop button on the controller.

Catwhisker limit switches

BOXHUNTER crane is equipped with catwhisker limit switches. Catwhiskers help preventing the gantry from hitting the container stacks (for example, if the operator fails to control the gantry travel accurately along the site runways).

BOXHUNTER crane contains four catwhisker limit switches, one on each bogie. Each whisker extends inwards from the side of the bogie beam (towards the center of the gantry).

Copyright © (2016) Konecranes. All rights reserved.

If the catwhisker is deflected by striking the container stack or any other obstacle, an appropriate alarm is raised on the operator panel, and the gantry travel motion is stopped and inhibited in both directions.

You can also bypass the catwhisker limit switches with a push-button on the controller, for example, when recovering from a collision situation, or otherwise moving the gantry away from an obstruction. For more information on the bypass function, see *Recovering from a collision situation*.

WARNING! COLLISION HAZARD

The violent emergency braking of the gantry travel motion puts unnecessary strain on the crane structure and machinery. Sudden movement of the crane could lead to death, severe personal injuries, or property damage.

Do not use the catwhisker limit switches as a normal method of stopping the gantry long travel motion.

Gantry travel in high winds

When the wind speed exceeds 22 m/s, the PLC system limits gantry travel to the slow speed and sends an alarm (see Alarm 184 in the example):

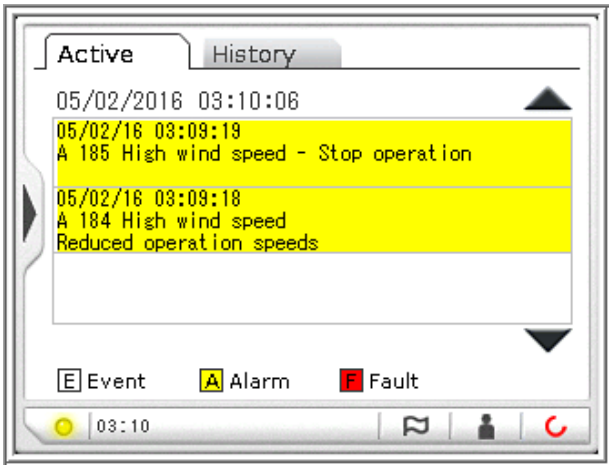

When the PLC system sends the alarm on the reduced operation speed due to high winds, start parking the gantry. See instructions in the *Operator's Manual* how to secure the crane in high wind conditions.

When the wind speed exceeds 25 m/s, the PLC system stops all the gantry traveling movements and sends an alarm (see Alarm 185 in the previous example).

Copyright © (2016) Konecranes. All rights reserved.

3.5 Trolley

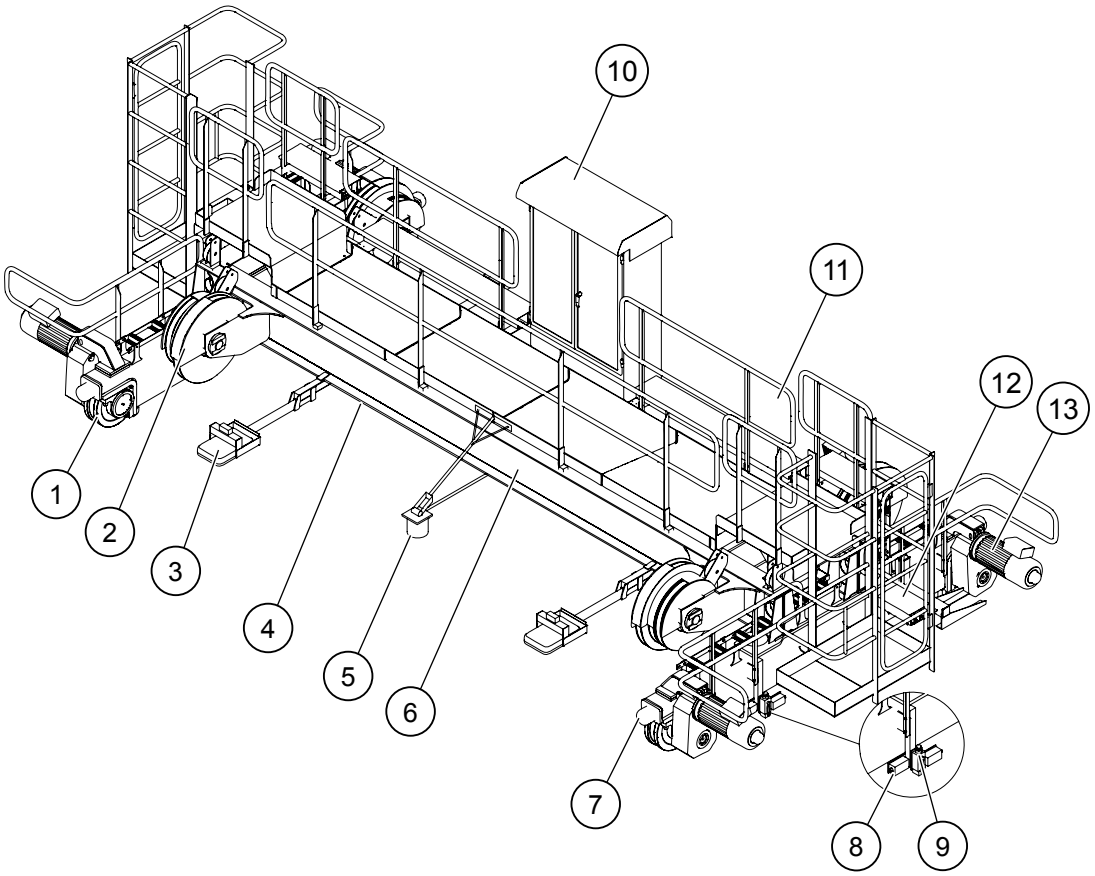

Figure 14. BOXHUNTER trolley

1. *End carriage (with trolley traversing wheels)*
2. *Rope sheave assembly*
3. *Trolley floodlight*
4. *Laser scanner (at the bottom of the trolley)*
5. *Trolley camera*
6. *Trolley frame*
7. *Buffer end stop*
8. *Magnetic limit switch*
9. *Mechanical limit switch*
10. *Electrical equipment cubicle*
11. *Trolley walkway*
12. *Energy chain interface*
13. *Trolley traversing unit (gear reducer + motor + disc brake)*

Trolley frame is a fully welded structure which supports the rope sheaves, the platform bridge, and the electrical equipment cubicle. The trolley is equipped with four floodlights and a camera. Trolley walkway and the access gates at both ends of the frame ensure the service access to the electrical equipment cubicle.

The two end carriages are fixed under the opposite sides of the frame using bolted flange joints. Each end carriage has two double-flanged wheels running along the rails, with adjustable bearing housings to allow precise alignment of the wheels. Each trolley wheel has its own gear reducer, induction drive motor, and mechanical disc brake.

Copyright © (2016) Konecranes. All rights reserved.

A folding energy chain mechanism supports all of the electrical power and control cables between the gantry and the trolley. One end of this chain is attached to the trolley and is either towed or pushed by the trolley traverse motion.

One trolley side is equipped with limit switches to ensure a controlled slow-down and stop movements before the traversing end.

A weather-proof enclosure for electrical equipment is on the top of the trolley. The enclosure contains individual circuit breakers and contactors for the power distribution of the spreader and the equipment that is mounted on the trolley. It also contains measuring and monitoring components for this equipment and for the PLC remote input and output units.

Each of the four trolley corners is equipped with a rope sheave assembly for hoist wire ropes. Under the trolley walkway, there are also guide rollers for the counterweight ropes.

3.5.1 Trolley traverse

The trolley traverse allows the suspended spreader to be positioned anywhere between the leg frames of the main girders.

When viewed from the operator seat, the trolley traverse directions are "Forward" and "Backward".

Trolley position measurement and indication

Trolley position along the main girder rails is measured continuously by the system, and the trolley current position is graphically indicated on the main display:

You can also check the trolley position in relation to various trolley limits via the operator panel, on the **Trolley Limits** page:

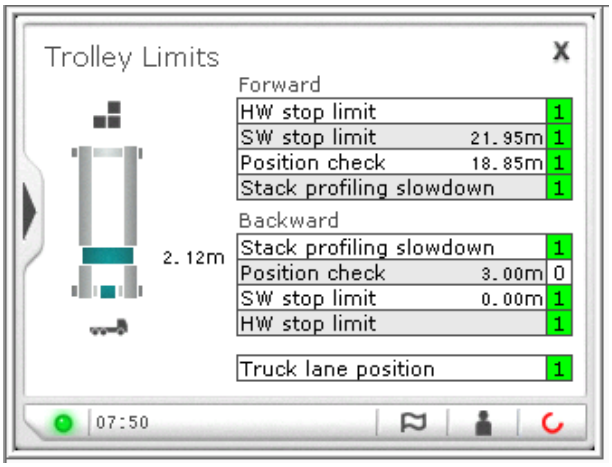

Trolley traverse slowdown and stop limits

Trolley position information is used for the intelligent slowdown and stop system of the trolley traverse motion.

Copyright © (2016) Konecranes. All rights reserved.

As the trolley approaches either end of its traversing range, its maximum speed is reduced as a function of the calculated distance from the end position. The traversing motion stops at the position where this speed limit function reduces to zero. This method is implemented with software limit switches.

In the operator panel, the **Trolley Limits** page indicates the current trolley position in relation to the magnetic limit switches with parameters **Position check forward** and **Position check backward**. When either limit is actuated, the PLC system checks that the measured trolley position is correct. If not, it takes immediate action to slow down the trolley to avoid a high-speed collision with the buffer stops at the end of the main girders.

In the intelligent slowdown system, the trolley traversing speeds are always maximized, especially for shorter trolley movements outside the slowdown regions. This results in the shortest container movement times, consistent with the trolley stopping safely at either end of its traversing range. When the trolley traverse is within each slowdown region, software limit switches calculated by the PLC system are actuated. On the operator panel, the **Trolley Limits** page indicates status for these limits with parameters **SW stop limit forward** and **SW stop limit backward**. The intelligent slowdown system allows the trolley to traverse away from either end position without speed limits.

Trolley is also equipped with the mechanical limit switches functioning as ultimate limit switches, if the intelligent slowdown and stop system is not working properly. Mechanical limit switch is actuated in the area just before the end of the main girders, and eventually, stops the trolley movement to avoid a collision with the end stops. **Trolley Limits** page indicates the trolley position to this area with parameters **HW stop limit forward** and **HW stop limit backward**.

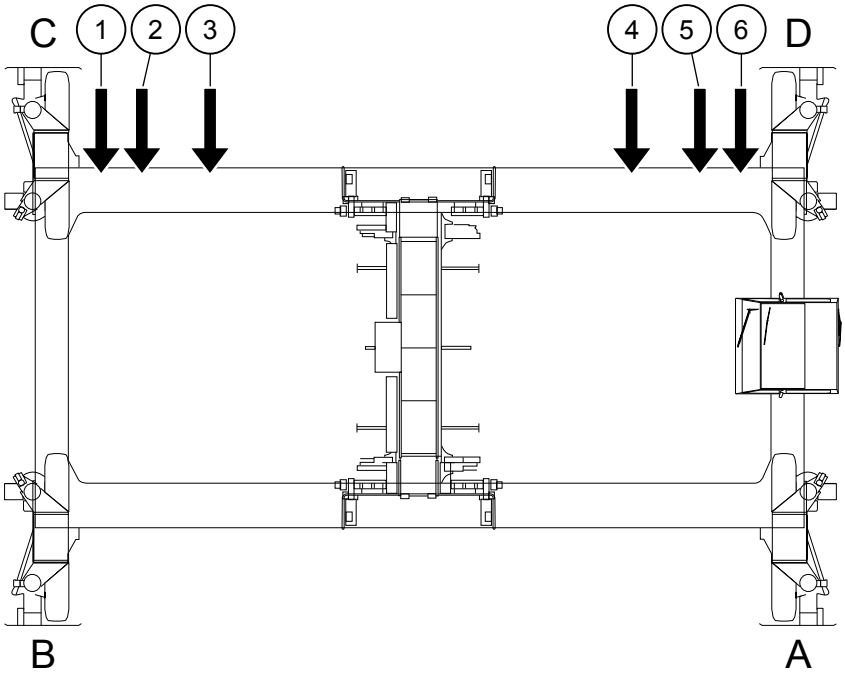

Figure 15. Trolley limit switch activation areas on the main girder

1. *HW stop limit forward*
2. *SW stop limit forward*
3. *Position check forward*
4. *Position check backward*
5. *SW stop limit backward*
6. *HW stop limit backward*

In addition to the limit switches and software interlocks, the BOXHUNTER crane is also equipped with a laser scanner at the bottom of the trolley. The laser scanner scans the container stack profile height and slows down the trolley motion in the calculated slowdown

Copyright © (2016) Konecranes. All rights reserved.

area. **Trolley Limits** page indicates the trolley position in this area with parameters **Stack profiling slowdown forward** and **Stack profiling slowdown backward**. For more information on the laser scanner function, see *Automation features*, *Stack collision prevention*.

Trolley traverse in high winds

When the wind speed exceeds 22 m/s, the PLC system limits trolley traverse to the slow speed, and an alarm is raised (see Alarm 184 in the following example):

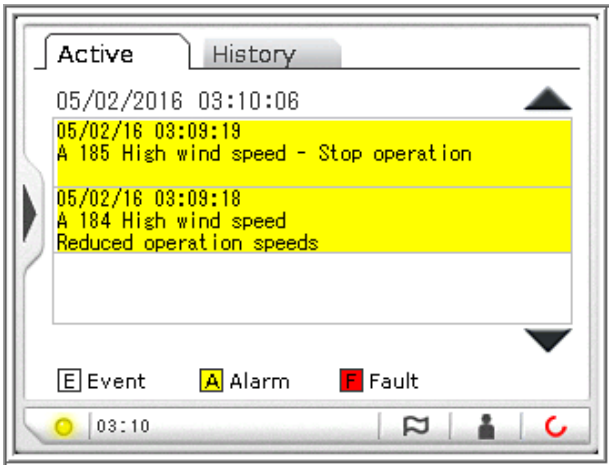

When the PLC system sends the alarm on the reduced operation speed due to high winds, start parking the gantry. See instructions in the *Operator's Manual* how to secure the crane in high wind conditions.

When the wind speed exceeds 25 m/s, the trolley traverse is stopped, and an alarm is raised (see Alarm 185 in the previous example).

3.6 Hoist

3.6.1 Hoisting machinery

BOXHUNTER crane is fitted with two hoisting machinery units that are mounted on the top of the sill beam above the diesel alternator set:

Copyright © (2016) Konecranes. All rights reserved.

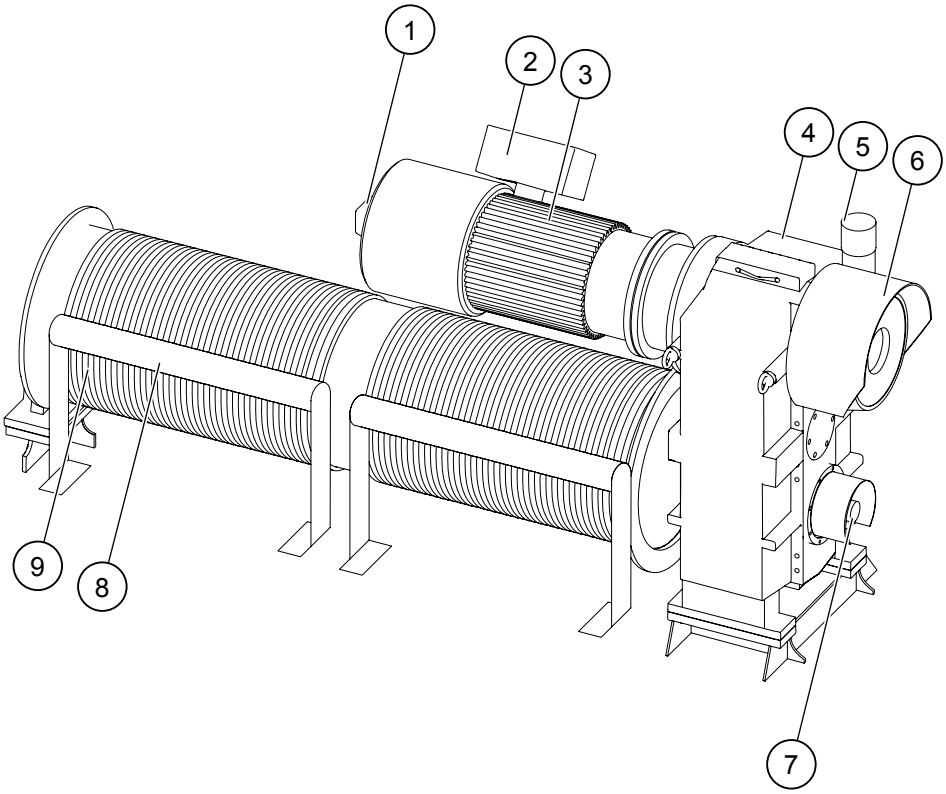

Figure 16. BOXHUNTER hoisting machinery unit

1. *Pulse encoder (for speed feedback and hoist overspeed protection)*
2. *Junction box*
3. *Hoisting motor*
4. *Gear reducer*
5. *Air conditioner (desiccant breather)*
6. *Holding brake assembly (with a mechanical disc brake)*
7. *Absolute encoder (for hoist position measurement)*
8. *Pressure roller*
9. *Rope drum*

BOXHUNTER hoist motor is connected onto the other end of the gear reducer input shaft, with a motor coupling to permit a small amount of shaft misalignment. Mechanical disc brake is fitted onto one end of the gear reducer input shaft and holds the hoist when the motor is not running. This brake is engaged by springs. Pulse encoder for speed feedback and hoist overspeed protection is fitted onto the end of the motor shaft. Hoisting machinery cabling goes through the junction box.

BOXHUNTER hoist rope drum has two spiral grooves which are machined in opposite directions. The two hoist ropes are clamped to the drum and wound into the machined spiral grooves. Pressure rollers ensure that the wire ropes wind on the drum correctly, and prevents the wire ropes from jumping into the wrong grooves. Hoist drum is mounted onto the output shaft of the gear reducer, with a drum coupling to permit a small amount of angular misalignment.

Absolute encoder for hoist position measurement is installed at the other end of the gear reducer output shaft.

Air conditioner (desiccant breather) is mounted on the breather plug of the gear reducer, preventing the oxidation of lubrication oil and bearing surfaces.

Copyright © (2016) Konecranes. All rights reserved.

3.6.2 Counterweight system

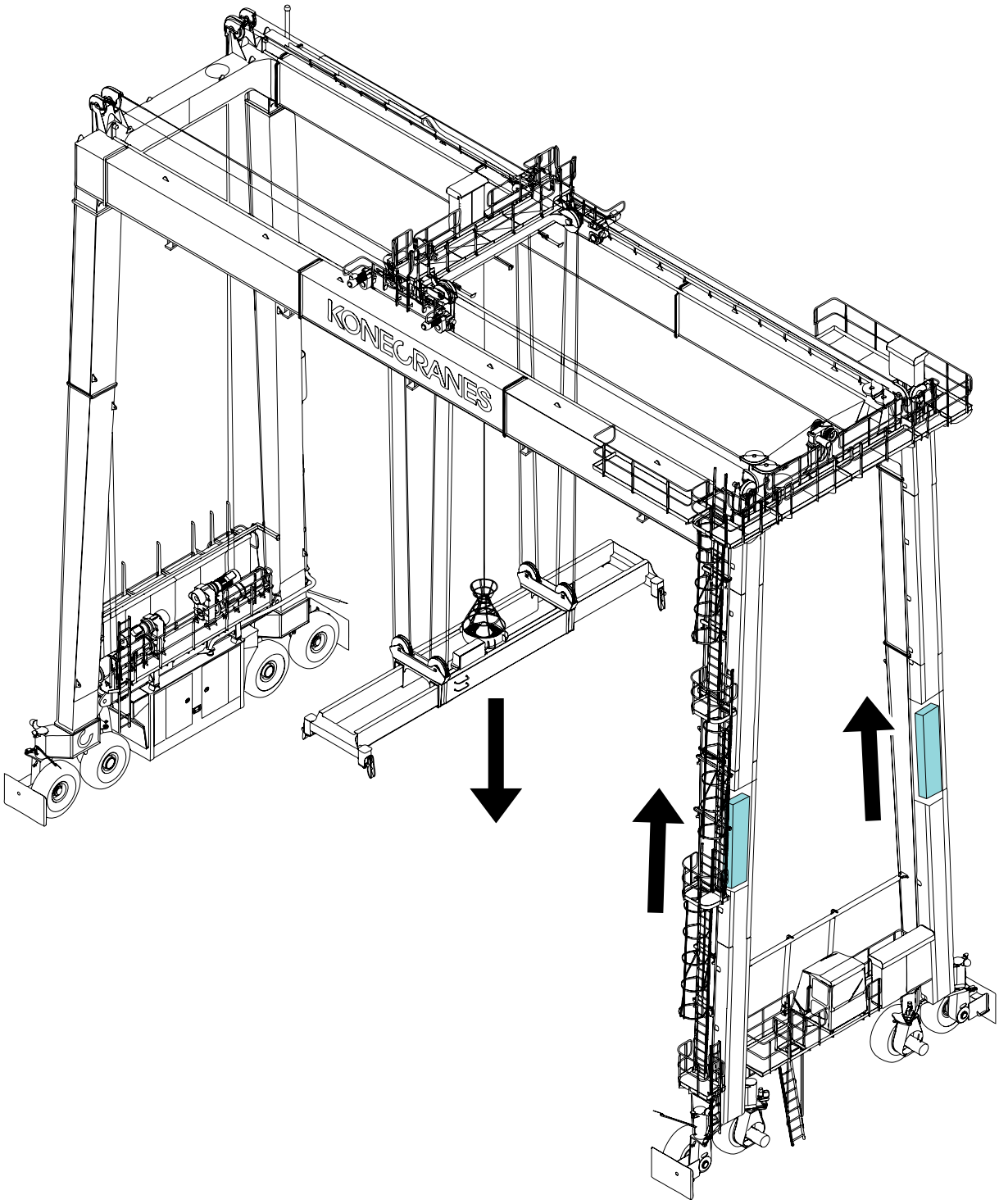

Figure 17. BOXHUNTER counterweight system

BOXHUNTER crane is equipped with a counterweight system for compensating the spreader weight and thus minimizing the energy consumption. Counterweight system, that is located on the access side of the gantry, consists of two weights. Each weight is independently roped with a hoisting machinery unit. When the spreader is lifted or lowered, the counterweight units run to the opposite direction along the access side gantry legs.

The mechanical hoist upper and lower stop limit switches are located at the ends of the counterweights rails.

Copyright © (2016) Konecranes. All rights reserved.

3.6.3 Skew machinery

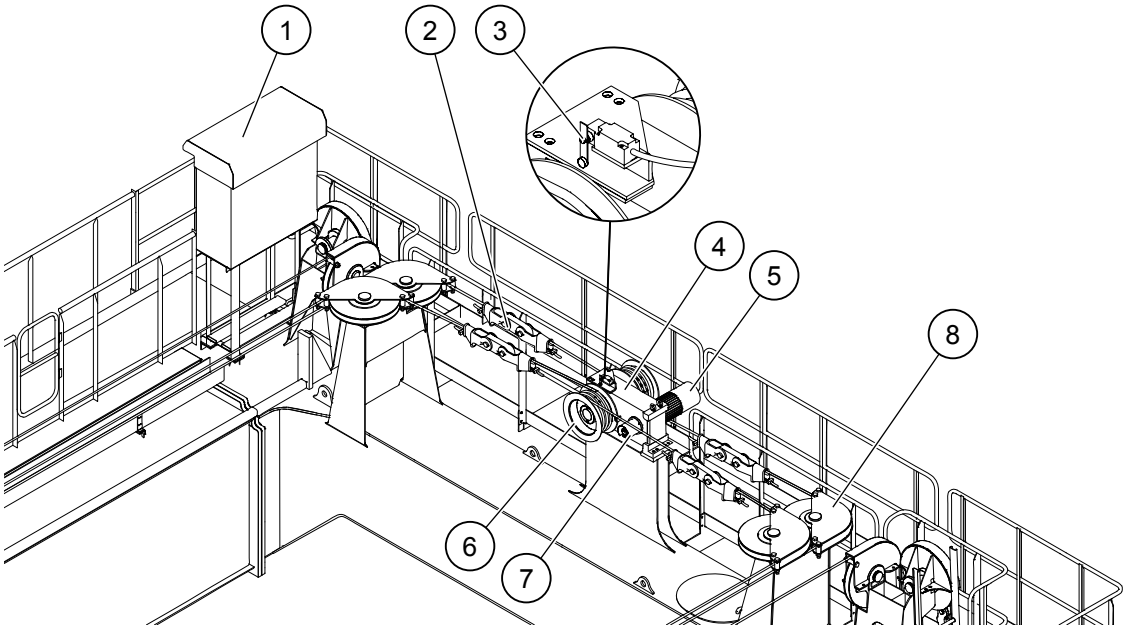

Figure 18. BOXHUNTER skew machinery

1. *Electrical equipment cubicle*
2. *Load cell*
3. *Mechanical limit switch*
4. *Gear reducer*
5. *Motor with a pulse encoder and a mechanical brake*
6. *Skew rope drum*
7. *Absolute encoder*
8. *Rope sheave*

BOXHUNTER crane is provided with a skew machinery that is located at the end of the main girder. Skew machinery enables a limited skewing motion for adjusting the axial alignment of the suspended load relative to the gantry. The alignment of the load is achieved by adjusting the lengths of four hoist ropes that are connected to the skew ropes with load cells. Driving the skew machinery in either direction feeds out one rope and pulls in the other rope. The hoist ropes are angled from the spreader to the trolley, which causes the suspended load to skew.

Skew motion is controlled with software and mechanical limits. PLC system allows the maximum of ±5 degree skew motion with the skew ropes. This software stop limit is calibrated during commissioning. The skew machinery is also equipped with a mechanical limit switch that ultimately stops the skew motion, and prevents the load cells from colliding with skew rope drums or with rope sheaves.

The load cells send signals to the load supervision unit located in the electric equipment cubicle of the skew machinery. The load supervision unit is foremost monitoring and calculating possible overload, other load measurements are done in the PLC system.

Copyright © (2016) Konecranes. All rights reserved.

3.6.4 Spreader

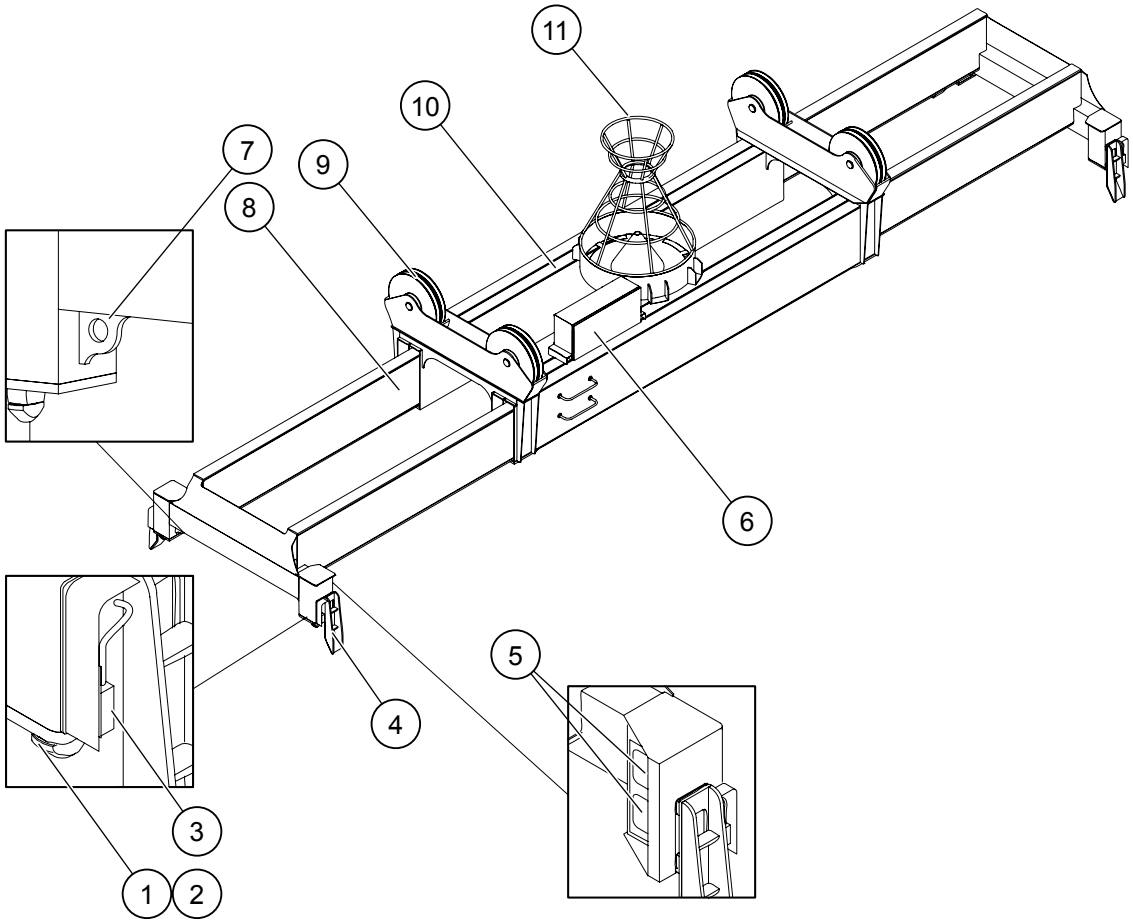

Figure 19. BOXHUNTER spreader

1. *Feeler pin*
2. *Twistlock*
3. *Camera*
4. *Fixed guide*
5. *Limit switches (for the feeler pin and twistlock)*
6. *Electrical equipment cubicle*
7. *Lifting eye*
8. *Telescopic arm*
9. *Rope sheave*
10. *Spreader main frame*
11. *Cable basket*

BOXHUNTER crane is equipped with a spreader that attaches to the top of a container during lifting operations. The length of the spreader arms can be adjusted to handle standard 20-ft or 40-ft containers. There are electrically operated twistlocks at each corner of the spreader that are used for attaching to the top of a container. Each corner is also equipped with a feeler pin, a fixed guide, and a camera for twistlock positioning. Locking and unlocking movements are controlled by the limit switches together with the PLC system.

Top side of the spreader has integrated rope sheaves at each corner of the spreader main frame. Each hoist wire rope passes around two rope sheaves, with four runs between the spreader and the trolley.

Copyright © (2016) Konecranes. All rights reserved.

In the center top side of the spreader, there is a steel basket for the electric cable between spreader and trolley. The cable self-coils into the basket when spreader is raised, and it feeds out while lowering. Next to the steel basket, there is an electrical equipment cubicle.

All of the spreader functions are commanded remotely from the operator's cabin. The main display shows the camera views to the twistlock corners and to the top of the container stack. The main display also indicates what is the current spreader position, when the spreader is landed on top of the container, and when the twistlocks are locked or unlocked.

NOTE ***When the spreader is fully retracted, its length is correct for lifting 20-ft containers. When the spreader is fully extended, its length is correct for lifting the 40-ft containers.***

As an alternative to the twistlocks, you can use the lifting eyes in the spreader corners for attaching the load. Before lifting, ensure that the load attached to the lifting eyes is symmetric in each spreader corner.

3.6.5 Rope reeving system

The following illustration shows the rope reeving of the BOXHUNTER crane. Two sets of hoist ropes, the counterweight ropes and the skew machinery ropes are presented with different colors. The same color coding is used in the close-ups of the rope installations. Letters "R" and "L" refer to the rope handedness (the right-hand lay rope and the left-hand lay rope).

Copyright © (2016) Konecranes. All rights reserved.

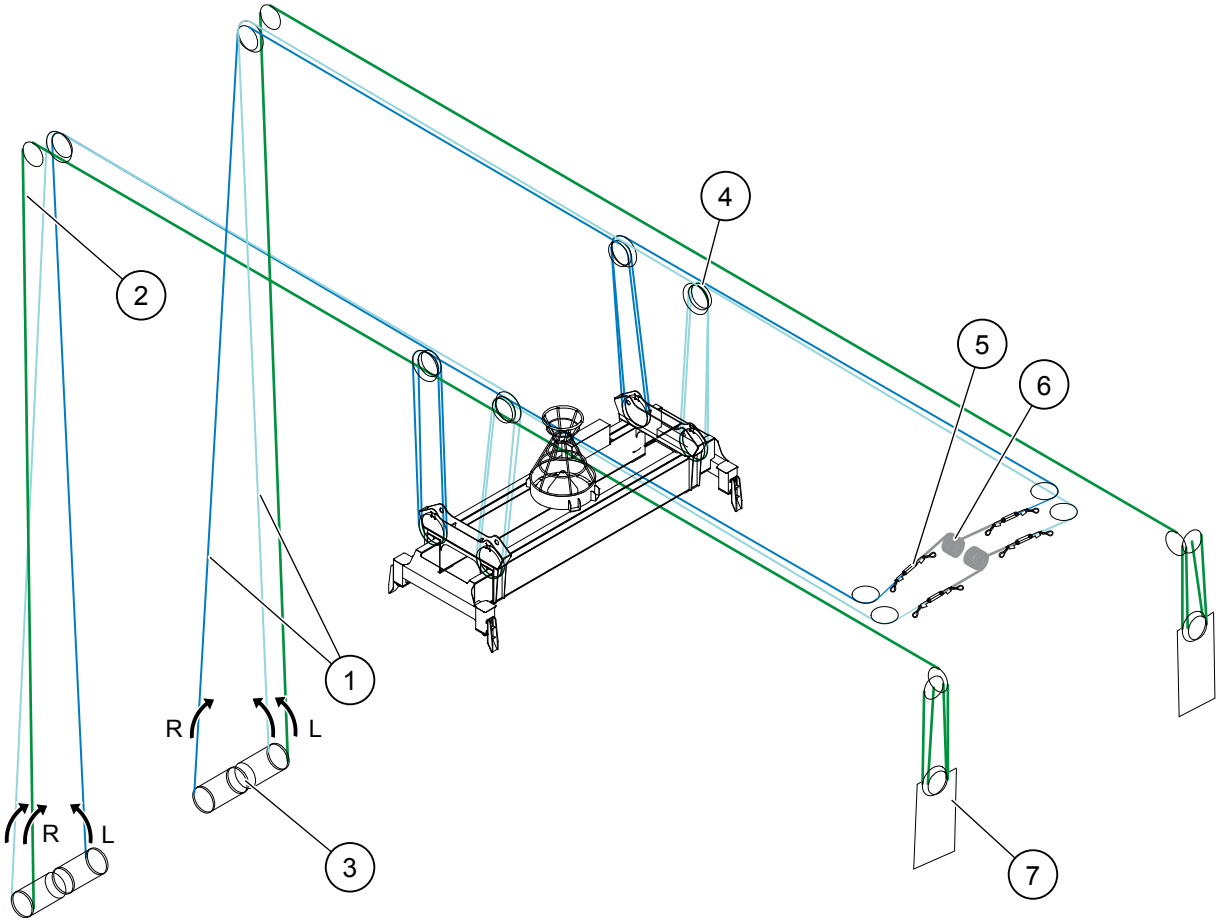

Figure 20. BOXHUNTER crane rope reeving

1. *Hoist wire rope*
2. *Counterweight wire rope*
3. *Hoisting machinery rope drum*
4. *Rope sheave*
5. *Load cell*
6. *Skew machinery wire rope*
7. *Counterweight*

Main components of the rope reeving system in BOXHUNTER crane are as follows:

- Four hoist ropes
- Two counterweight ropes
- Two skew machinery ropes
- Four load cells
- Two hoist rope drums
- Two skew machinery rope drums
- Four hoist rope sheaves (2 sheaves (1 big + 1 small sheave) in both corners of the top beam between the gantry legs B and C)
- Twelve trolley rope sheaves (3 sheaves (1 big + 2 small sheaves) in each corner of the trolley)
- Eight spreader sheaves (2 sheaves in each spreader corner)
- Four skew rope sheaves
- Ten counterweight rope sheaves

Both hoisting machinery rope drums have each two hoist ropes that are wound to the opposite directions. Counterweight ropes are fixed to the hoist rope drum flanges at the rope drum support side.

Copyright © (2016) Konecranes. All rights reserved.

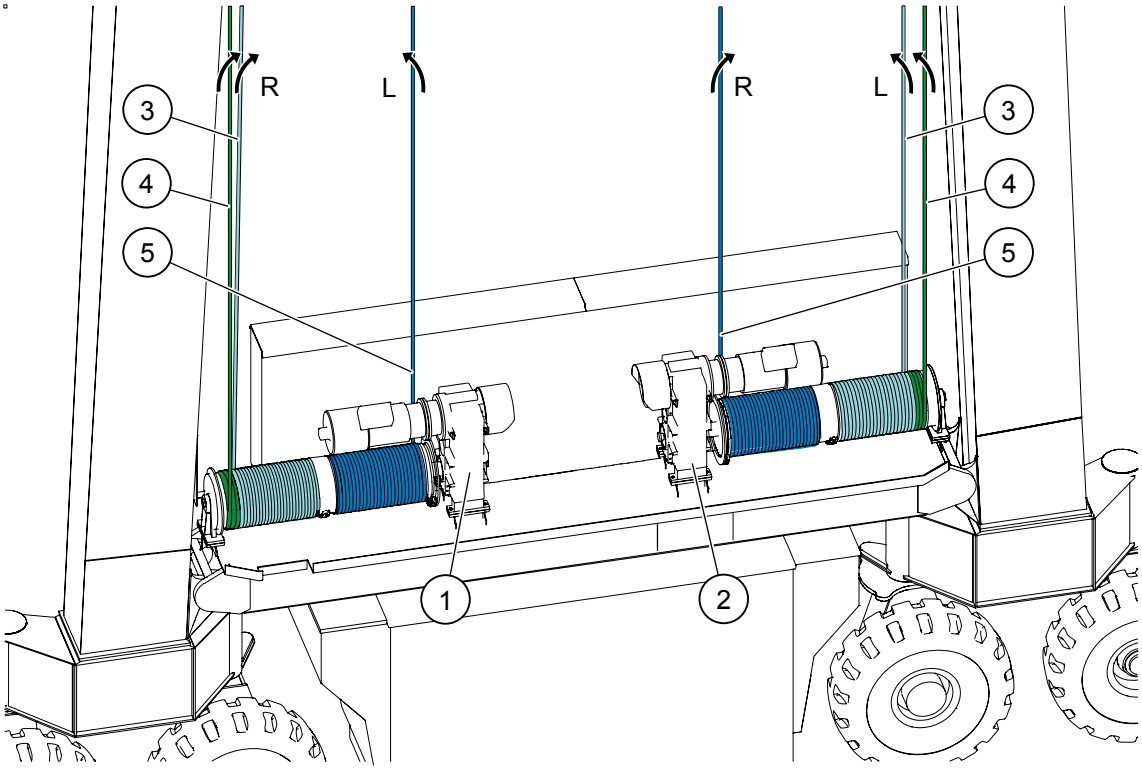

Figure 21. Rope reeving at the machinery platform

1. *Hoisting machinery A1*
2. *Hoisting machinery A2*
3. *Hoist rope*
4. *Counterweight rope*
5. *Hoist rope*

From the hoisting machinery platform, the hoist and counterweight ropes are guided via the rope sheaves located on the top beams to the trolley:

Copyright © (2016) Konecranes. All rights reserved.

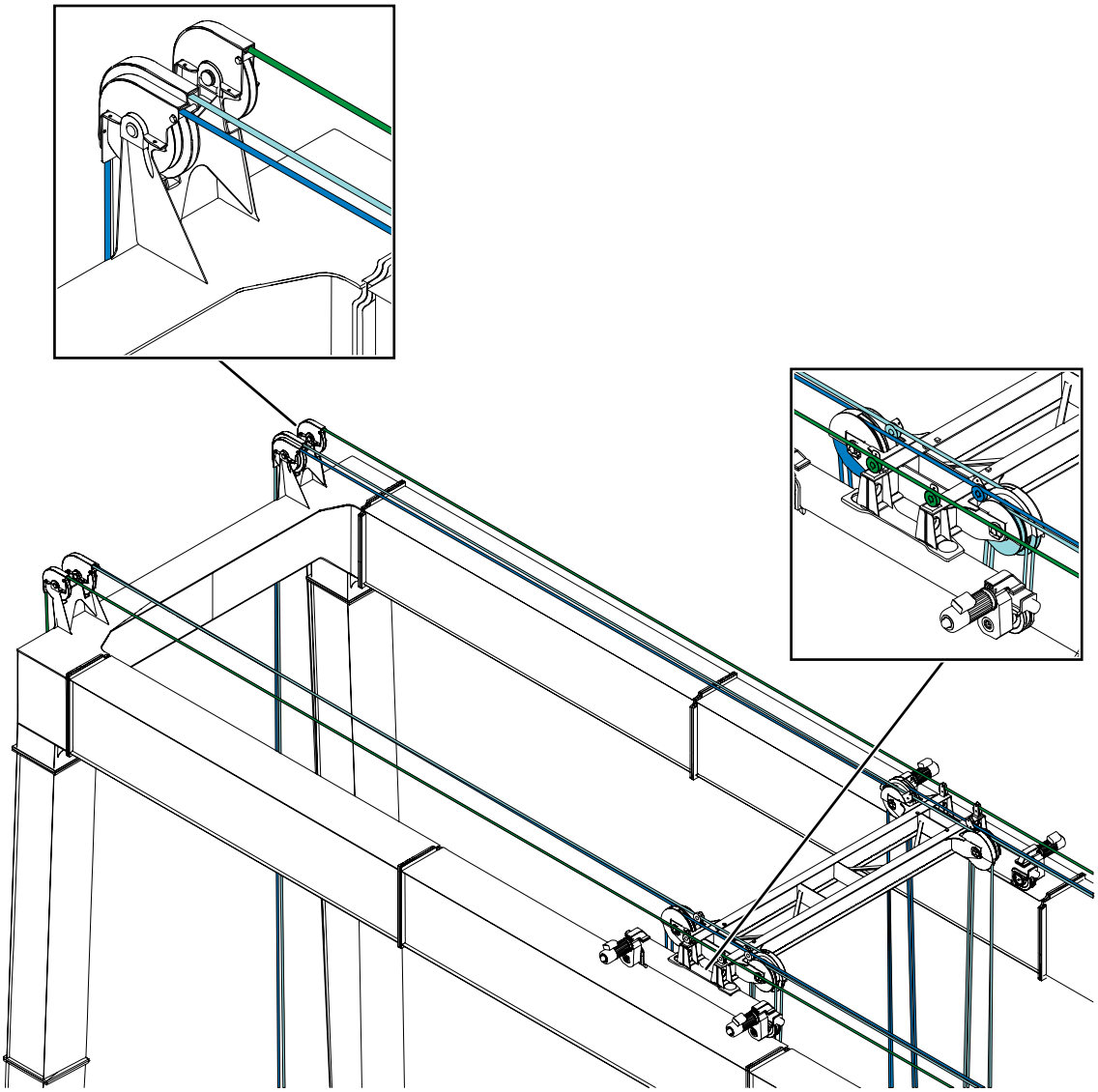

From the trolley, the hoist ropes are guided to the spreader and back to the trolley:

Copyright © (2016) Konecranes. All rights reserved.

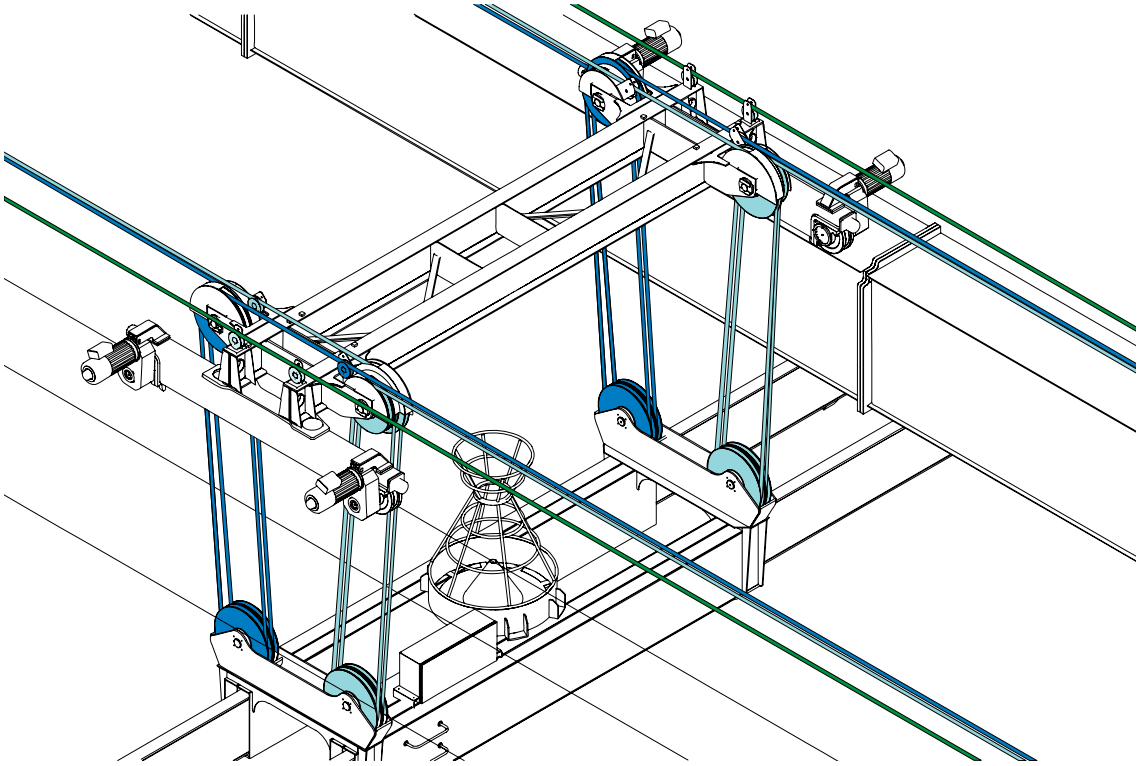

Trim motion of the spreader is done with the hoisting machinery units by driving the units and winding the hoist ropes in different speeds and directions.

From the trolley, the hoist ropes are guided to the skew machinery, where the hoist ropes are connected to the skew machinery ropes with the load cells:

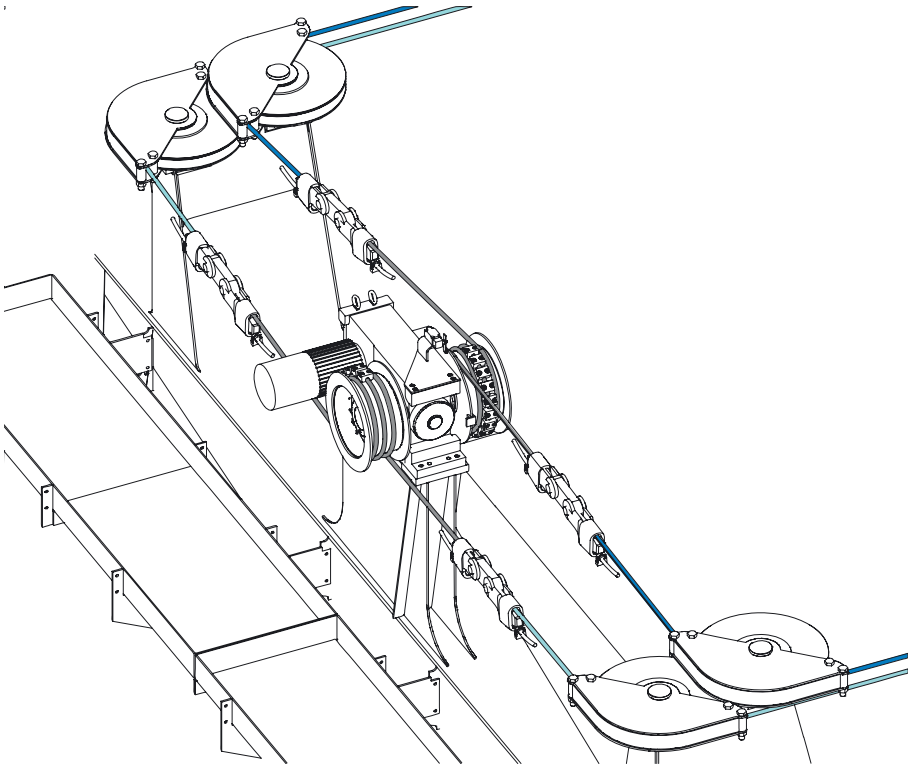

Load cells control hoisting movements and protect the hoisting machinery, ropes, and the gantry steel structure by preventing the operator from lifting too heavy loads.

Skew machinery enables the skew motion of the spreader via the skew machinery ropes.

Copyright © (2016) Konecranes. All rights reserved.

Counterweight ropes are guided via the guide rollers on the trolley to the two counterweights located at the access side, against the gantry legs A and C:

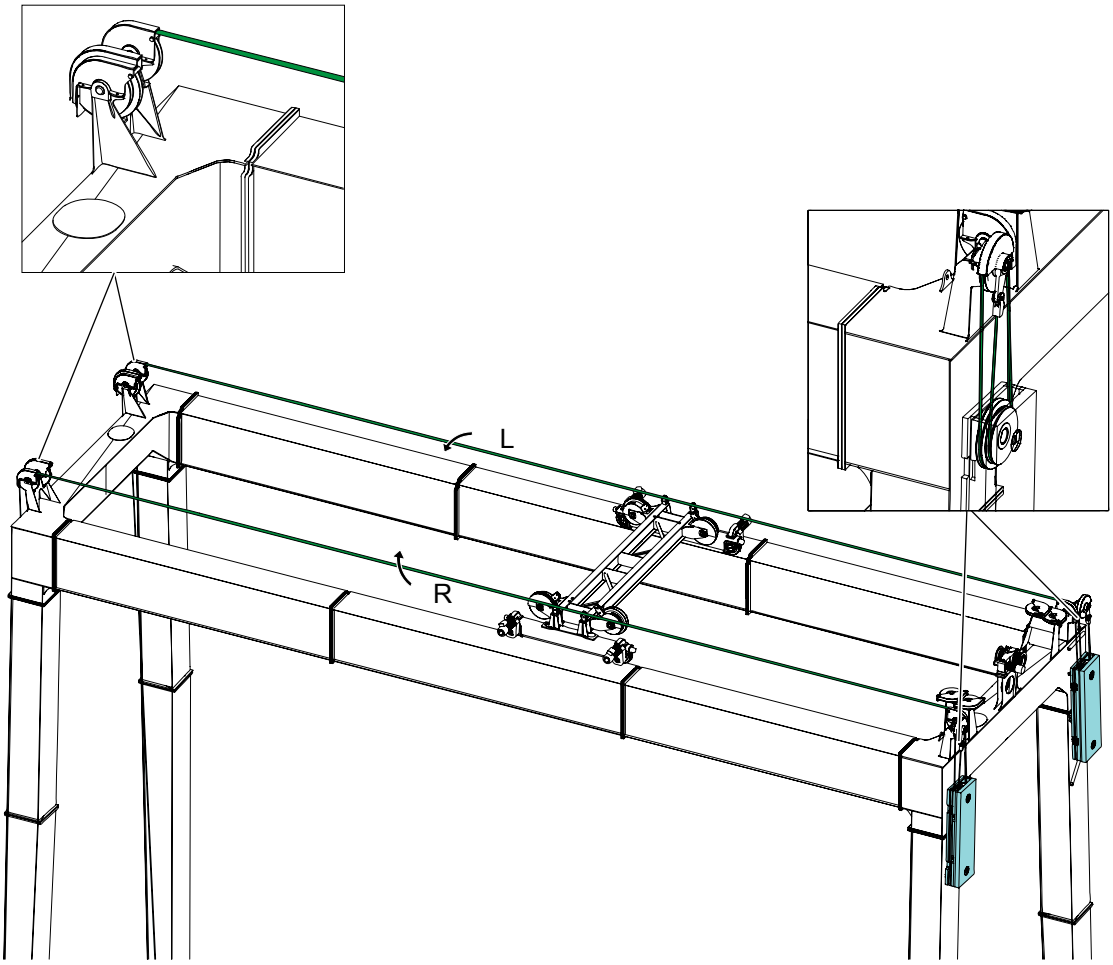

Counterweights compensate the spreader weight in the lifting and lowering motion, and minimize the crane energy consumption.

3.6.6 Hoist operations

Lifting and lowering

For lifting and lowering movements, move the joystick backward and forward on the controller. The hoisting machinery motors are controlled by frequency converters that drive the motors at the same speed. They automatically synchronize the movements and thus maintain the constant trim of the suspended load.

Interlock limit switches of the PLC system control the safe lifting and lowering of the load.

There are four overload sensors (load cells) located between hoist and skew wire ropes near the skew machinery. If the hoist overload limit is exceeded, the overload sensors indicate this to the PLC system that stops all lifting movement, but lowering is still possible.

Hoist trim

Hoist trim means that you can change the inclination angle of the spreader longitudinal axis. For example, if a truck has an inclined chassis, or if the container stack is not on level ground, you can align the spreader (and the container) by using the hoist trim function.

Copyright © (2016) Konecranes. All rights reserved.

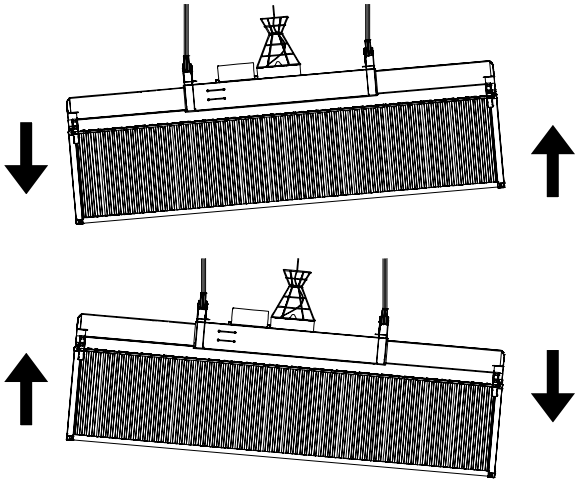

Figure 22. Hoist trim motions

For the hoist trim motion, deflect the right joystick to the left or right on the controller. The corresponding end of the spreader is lowered. The other end of the spreader is lifted at the same time. The simultaneous movements reduce the time spent on changing the trim angle. Acceleration, deceleration, and trim speed of the hoist drives are controlled by the PLC system. The current inclination angle of the hoist trim is shown in the main display. The trim range is ±5 degrees.

Spreader skew

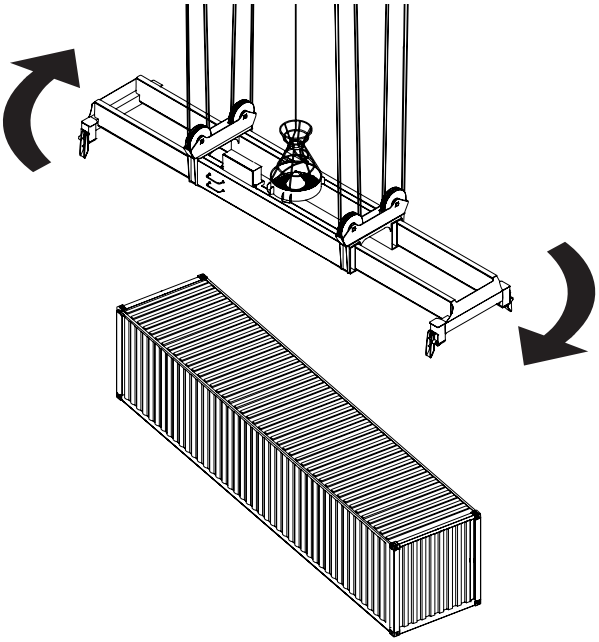

Figure 23. Spreader skew motion

Spreader skew means the rotation of the spreader around its vertical axis. The skew range is ±5 degrees. Skew adjustment is sometimes required to adjust the spreader and the twistlocks correctly on the top of a container that is not fully aligned with the runway or existing container stacks. You can adjust the spreader skew clockwise or counter-clockwise with the specific push-buttons in the controller.

Hoist intelligent slowdown and stop

The calculated hoist height is used for the intelligent slowdown and stop system of the hoist at either end of its operating range.

Copyright © (2016) Konecranes. All rights reserved.

With this intelligent slowdown and stop system, the hoist speeds are always maximized, especially for small lifting movements within the upper slowdown region. This results in the shortest container handling times, consistent with the hoist stopping safely before the spreader reaches the trolley.

Hoist lifting speed limit

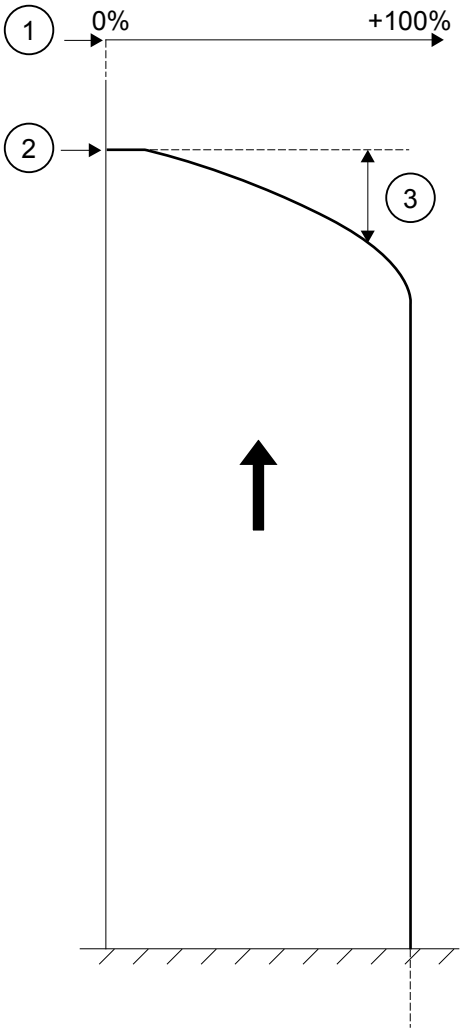

Figure 24. Hoist lifting speed limit

1. *Safety limit (a mechanical limit switch)*
2. *Software stop limit*
3. *Slowdown region*

As the hoist approaches the upper end of its operating range, its lifting speed is reduced as a function of the calculated distance from the software stop limit. This ensures that the spreader is only moving upwards slowly as it approaches the software stop limit.

The hoist lifting stops when the measured hoist height reaches the position of the software stop limit.

The position of the software stop limit and the extent of the slowdown region are preset in the PLC software (based on the crane design data).

If the PLC system fails to stop the lifting for some reason, the safety limits (mechanical limit switches) ultimately prevent further lifting movement. The safety limits are located at the lower ends of the counterweight rails.

Copyright © (2016) Konecranes. All rights reserved.

Hoist lowering speed limit

WARNING! COLLISION HAZARD

During lowering, the hoist slowdown system cannot prevent collisions between the empty spreader and objects on the ground (for example, a truck or a container stack), or between a suspended container and objects below it.

Do not use the hoist lowering speed limit as the normal means of slowing down the lowering speed. Control the hoist lowering speed actively with the joystick.

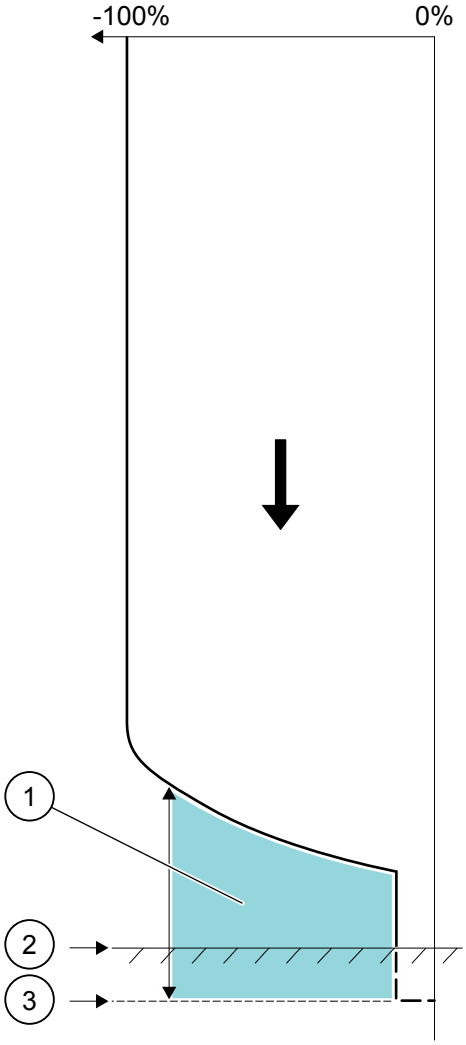

Figure 25. Hoist lowering speed limit

1. *Slowdown region*
2. *Ground level (slack rope)*
3. *Stop limit (a mechanical counterweight upper limit switch)*

As the hoist approaches the lower end of its operating range, its lowering speed is reduced as a function of the calculated distance from the stop limit. Within the slowdown region, hoist lowering is limited to the slowdown speed. This ensures that the spreader is only moving slowly as it lands on the ground.

NOTE

There are no safety limit switches in the hoist lowering direction, as when the spreader is resting on the ground, the slack rope condition normally occurs before the mechanical upper limit switches at the top of counterweight rails are actuated. These limit switches ultimately prevent the rope drums from unwinding to the friction turns.

Copyright © (2016) Konecranes. All rights reserved.

The extent of the slowdown region and slack rope detection are preset in the PLC software (based on the crane design data and load measurement calibration). Lowering speed limit has no effect while the hoist is lifting.

Hoist speed supervision

Each hoist motor has an incremental pulse encoder unit on the outboard end of the motor shaft. Pulse signals from the encoder are fed to an individual speed supervision unit that is part of hoist motor frequency converter. This system is independent of the PLC software, and it continuously monitors possible motor speed faults like overspeed, stall, or speed difference.

If the speed supervision equipment detects a fault condition, the hoist drive is shut down by its associated control equipment. On such a fault, the mechanical brake on the hoist drive is applied without any delay. Fault signal is also sent to the PLC, which delivers the fault information also to the other hoist drive with the same control actions. Further lifting and lowering is inhibited, and an alarm message is shown on the operator panel, see the following example:

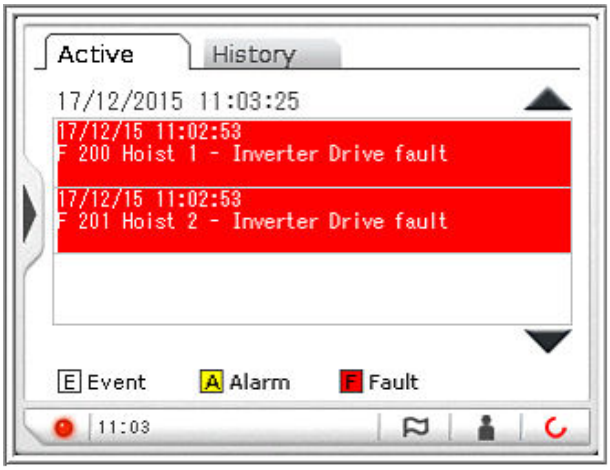

If a hoist speed fault occurs, call always for maintenance assistance before you continue using the crane.

WARNING! FALLING LOAD HAZARD

If a hoist speed occurs, there is a risk of machine malfunction and falling load.

Make sure that there are no persons below the hanging load. Do not operate the hoist before the maintenance personnel has rectified the fault situation. Do not release the mechanical brakes on either hoisting machinery unit unless the spreader (and its load) is resting on the ground or is fully supported by other means.

Hoist load measurement and container load indication

Load measurement equipment

For load measurement, there are four calibrated load cells between the hoist and skew ropes. The signals from the load cells are fed to the load supervision unit located in the electrical equipment cubicle of the skew machinery. The load supervision unit passes the load information to the PLC system that performs the actual load calculations. The load supervision unit only supervises and directly calculates possible overload.

NOTE ***Load measurement equipment is calibrated in the crane commissioning.***

Copyright © (2016) Konecranes. All rights reserved.

Load take-up and container weighing

To ensure that the load take-up is smooth and that there are no dynamic load measurement faults during the container weighing, the acceleration of the lifting movement has special control steps when lifting starts with slack ropes:

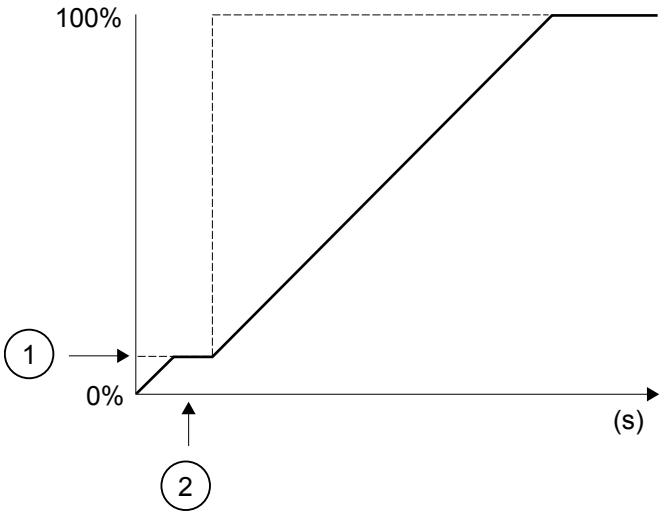

Figure 26. Load take-up and container weighing

1. *Weighing speed limit*
2. *Weighing time*

Container weighing steps in the load take-up phase:

1. *Hoist is accelerated to the preset "weighing" speed limit. Hoist load is constantly checked until the slack rope condition is cleared (that is, the hoist wire ropes are partially tight, but not necessarily taking the full weight of the load).*
2. *After another preset time delay, to ensure that the hoist wire ropes are completely tightened, the container load is calculated from the hoist load.*
3. *When the load weighing is done, the weighing speed limit is removed, and the normal hoist speed is enabled. Operator can now control the hoist speed with the joystick.*

Copyright © (2016) Konecranes. All rights reserved.

Spreader and container weight indication

Container weight s calculated in the PLC system by subtracting the fixed tare weight of the spreader (determined during commissioning) from the total suspended hoist load.

The container weight (from the most recent weighing sequence) is shown on the main display in the operator's cabin and on the **Loads** page on the operator panel. This value is displayed in metric tons (t=1000 kg).

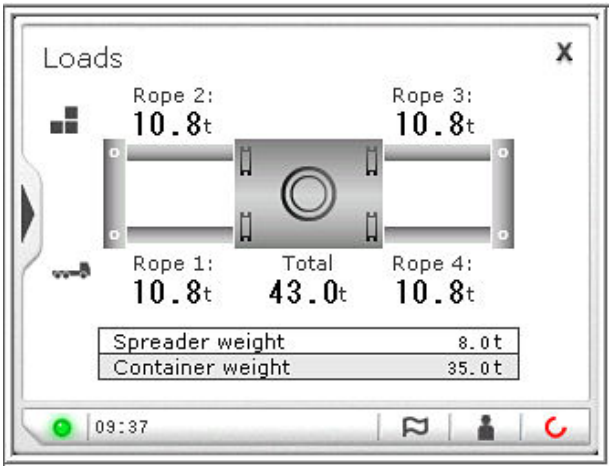

Figure 27. Spreader and container weight information on the operator panel

Slack ropes

Measured hoist load is used to detect when the hoist wire ropes are slack (that is, when the hoist is not supporting even the suspended weight of the spreader).

When the hoist wire ropes are slack, the hoist lowering is inhibited, but lifting is possible at slow speed. This occurs, for example, when the spreader is resting on the top of a single container or on the top of a container stack. When lifting starts, the PLC system performs the load take-up and container weighing as described in the previous section.

It is possible to bypass slack ropes with a push-button on the controller, and enable the hoist lowering. For example, maintenance personnel may need this bypass function in some special fault situations.

Hoist overload protection

BOXHUNTER crane has a comprehensive overload protection system. The active overload alarms are shown on the operator panel.

Overload warning

⚠ WARNING

FALLING LOAD HAZARD

While an overload warning alarm is active, there is an increased risk of falling load.

Perform the continued lifting or lowering of the hoist or any movements of the trolley or the gantry with great care.

Total Overload Warning alarm message is activated when the measured total hoist load exceeds a preset level (90% of the crane rating):

Copyright © (2016) Konecranes. All rights reserved.

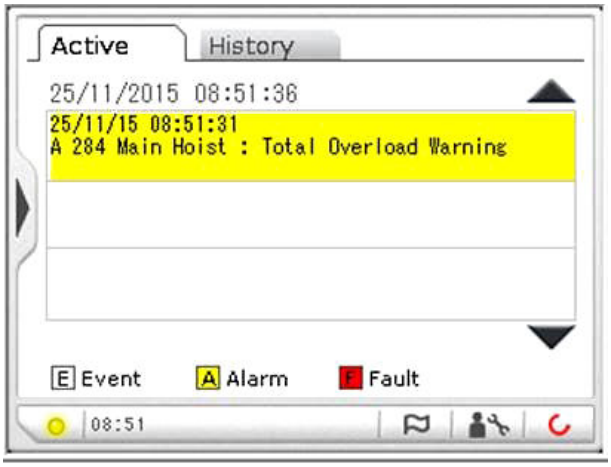

Eccentric Overload Warning alarm message is activated when the load at either end of the spreader reaches certain preset load level:

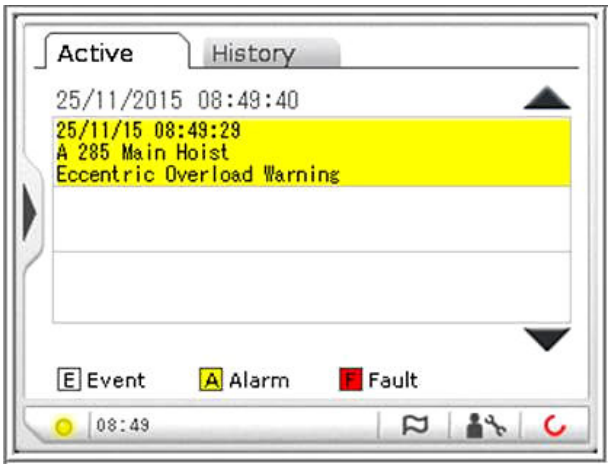

If the measured load increases further, the hoist acceleration time is also increased, and the system sends an event message on the increased ramp-up time:

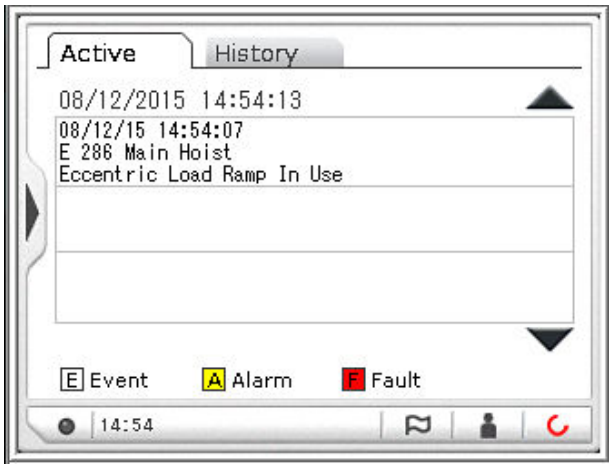

Overload stop

Total Overload is activated when the measured total hoist load exceeds 110% of the crane rating:

Copyright © (2016) Konecranes. All rights reserved.

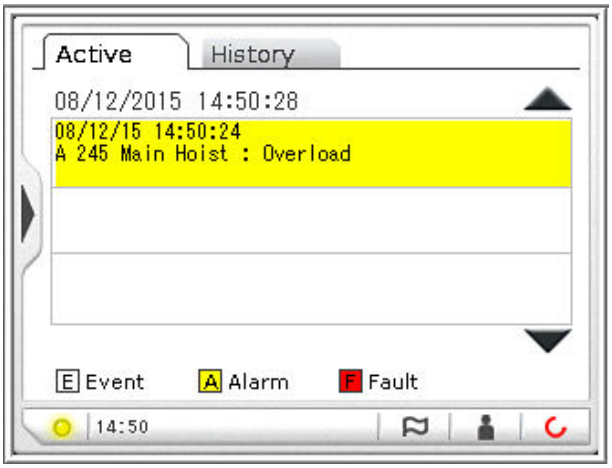

Eccentric Overload is activated when the load at either end of the spreader reaches certain preset stop level:

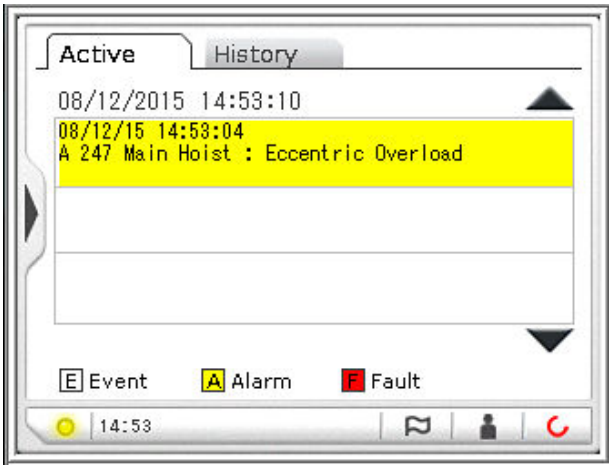

Rope Overload is activated when the load in the individual spreader corners reaches a certain preset stop level:

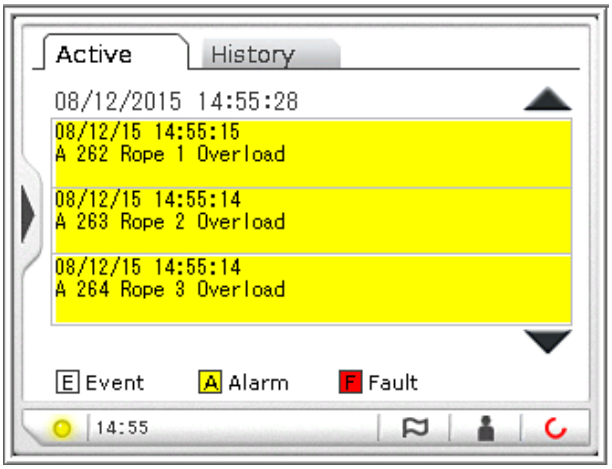

NOTE ***While an overload stop is active, the PLC system allows only hoist lowering, and the gantry and trolley motions at low speed (10% of the normal speed).***

For instructions how to handle an overload situation, see *Recovering from an overload stop alarm*.

Copyright © (2016) Konecranes. All rights reserved.

Snagged load

The suspended load of the hoist is continuously measured during all operations of the BOXHUNTER crane.

If the suspended load becomes snagged on an obstruction during any hoist lifting or lowering, trolley traverse, or gantry travel motion, the measured load on the hoist wire ropes increases rapidly. In this situation, when the measured load reaches 125 % of the rated capacity, the PLC system sends an alarm message:

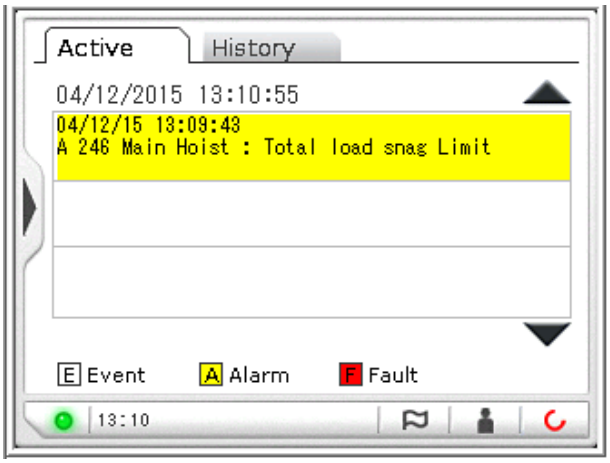

When the alarm is active, the PLC system allows only hoist lowering, and gantry and trolley traveling at low speed (10% of the normal speed). For further instructions how to recover from the situation, see *Handling the snagged load*.

Hoist height measurement

The angular position of each hoist rope drum is measured by a multi-turn absolute encoder located in the gear reducer. The height of each individual hoist is calculated in the PLC system on the basis of the absolute encoder value. Each individual hoist height is zero (0) when the empty spreader is resting on the ground.

NOTE ***Absolute encoder values are calibrated during commissioning.***

Hoist height indication

The current measured values from the absolute encoders are indicated on the **Hoist Limits** page on the operator panel. These values are scaled in meters above ground level (to the bottom of the spreader).

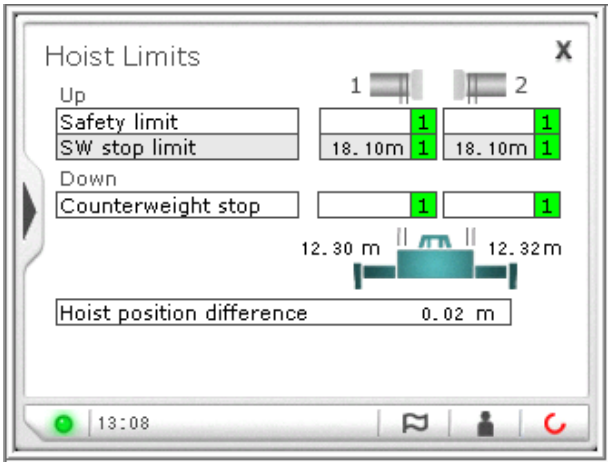

Figure 28. Hoist limits page with hoist height information

Copyright © (2016) Konecranes. All rights reserved.

3.7 Automation features

3.7.1 Auto-steering

BOXHUNTER crane is fitted with a global positioning system (GPS) for the accurate positioning of the crane. The position of the crane is used for the auto-steering feature. When auto-steering is in use, the crane behaves as if guided by a virtual rail during the gantry long travel motions. You do not have to make any skew adjustments to keep the gantry correctly aligned with the container stack.

The GPS equipment includes a base station and an antenna at each end of the gantry for measuring the exact position of the crane and the alignment of the gantry. Proper functioning of the system requires that the antennas can detect a sufficient number of GPS satellites.

For each container stack, a virtual "guide rail" is programmed into the GPS equipment during commissioning. The coordinates of the GPS guide rails are an exact replica map of the runways at the customer site.

If the crane is positioned within a preset distance from one of the GPS guide rails, the system can "lock" onto this rail. The system calculates continuously the exact distance between the crane and this GPS rail. The GPS measurements are transmitted to the auto-steering system in the PLC that controls the gantry travel.

When the system is locked onto a GPS rail, you can switch the auto-steering mode ON with the **GPS** selector switch on the dashboard. The automatic control system makes any necessary skew adjustments during each gantry long travel movement. You can monitor the GPS and the associated auto-steering system via the **GPS Rail** page on the operator panel.

NOTE ***When the auto-steering mode is ON, the manual gantry steering adjustment is disabled.***

Copyright © (2016) Konecranes. All rights reserved.

3.7.2 Stack collision prevention

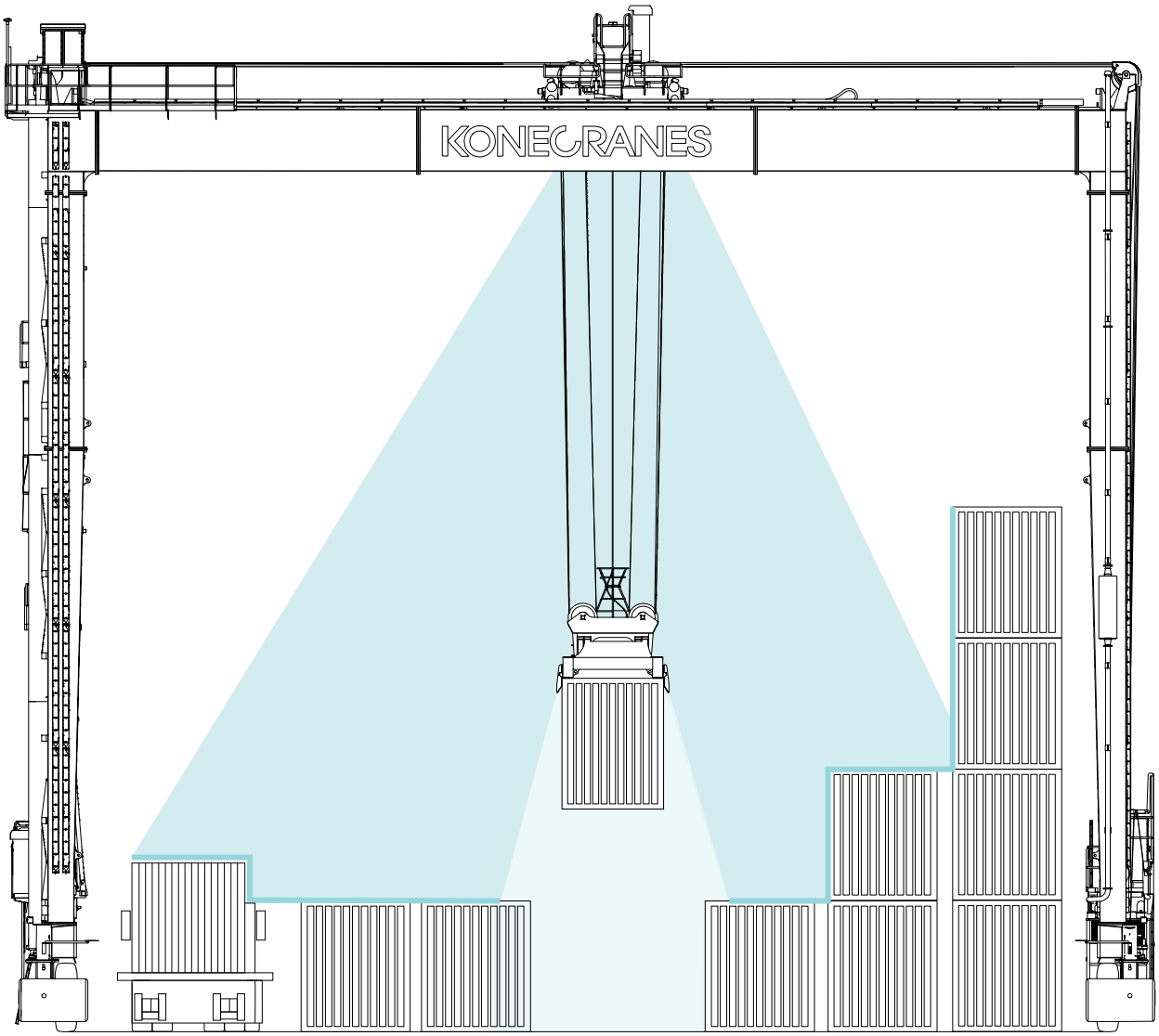

Figure 29. Stack profiling slowdown area

BOXHUNTER crane is equipped with a laser scanner mounted under the trolley. The laser scanner scans the container stack profile height and the system slows down the trolley motion when the handled container is approaching the stack. The speed slows down to the minimum until impact, which helps preventing container collisions.

The trolley position to this slowdown area is indicated on the **Trolley Limits** page on the operator panel, with parameter **Stack profiling slowdown**.

Laser scanner also controls the hoisting speed of the spreader and the container.

3.8 Electrical equipment cubicles

Most of the crane electrical equipment is inside the electrical equipment cubicles. These weather-proof enclosures are located above the main diesel alternator enclosure, on the cabin side sill beam, on the trolley platform, on the spreader, and next to the skew machinery.

3.9 Camera system for stacking and gantry operations

For observing the stacking and gantry travel operations, BOXHUNTER includes camera views to the following locations:

Copyright © (2016) Konecranes. All rights reserved.

- Gantry: 4 cameras (one on each bogie)
- Spreader: 4 cameras (one on each corner of the spreader)
- Trolley: 1 camera.

These camera views can all be monitored on the main display in the operator's cabin.

3.10 Crane lights

BOXHUNTER crane is equipped with the following lightning:

- Floodlights on the main girder (five lamps on each girder)
- Floodlights on the trolley frame (four lamps)
- Floodlights on the truck lane (two lamps attached to the cabin side sill beam)
- Walkway lights on the cabin side sill beam (one lamp next to the ladders, and one lamp mounted on the guiderail).

3.11 Foldable service platform and ladders

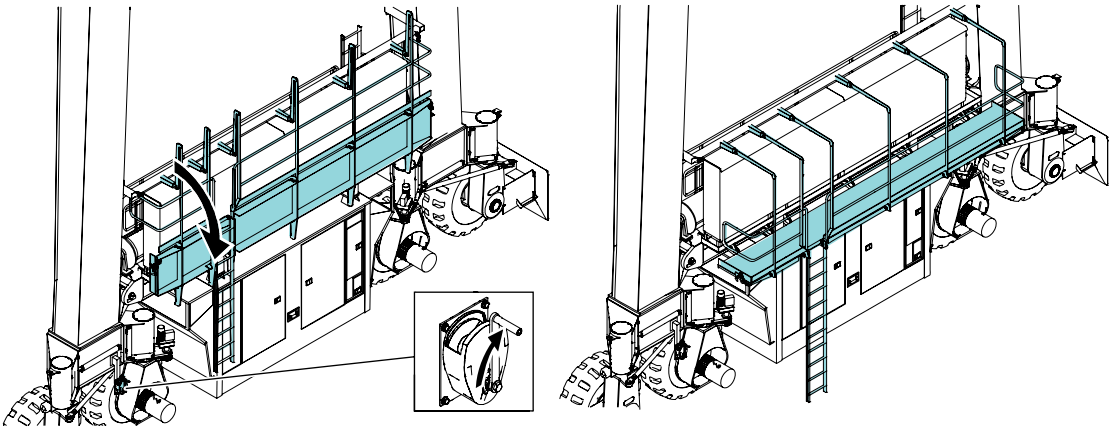

Figure 30. Foldable service platform

Foldable service platform is located on the machinery side sill beam, stowed against the electrical equipment cubicle row. During maintenance, the service platform can be unfolded manually with a winch.

BOXHUNTER crane is also equipped with portable ladders on the machinery sill beam for accessing the hoisting machinery units, and against the gantry leg A for accessing the top beam level. The mechanical limit switches prevent the operator from driving the gantry if the portable ladders are not placed in their hangers. Make sure that you place the ladders at correct height so that the turning wheels do not damage the ladders.

Note that the cabin ladder is permanently fixed at certain height (not touching the ground).

Copyright © (2016) Konecranes. All rights reserved.

3.12 Operator's cabin

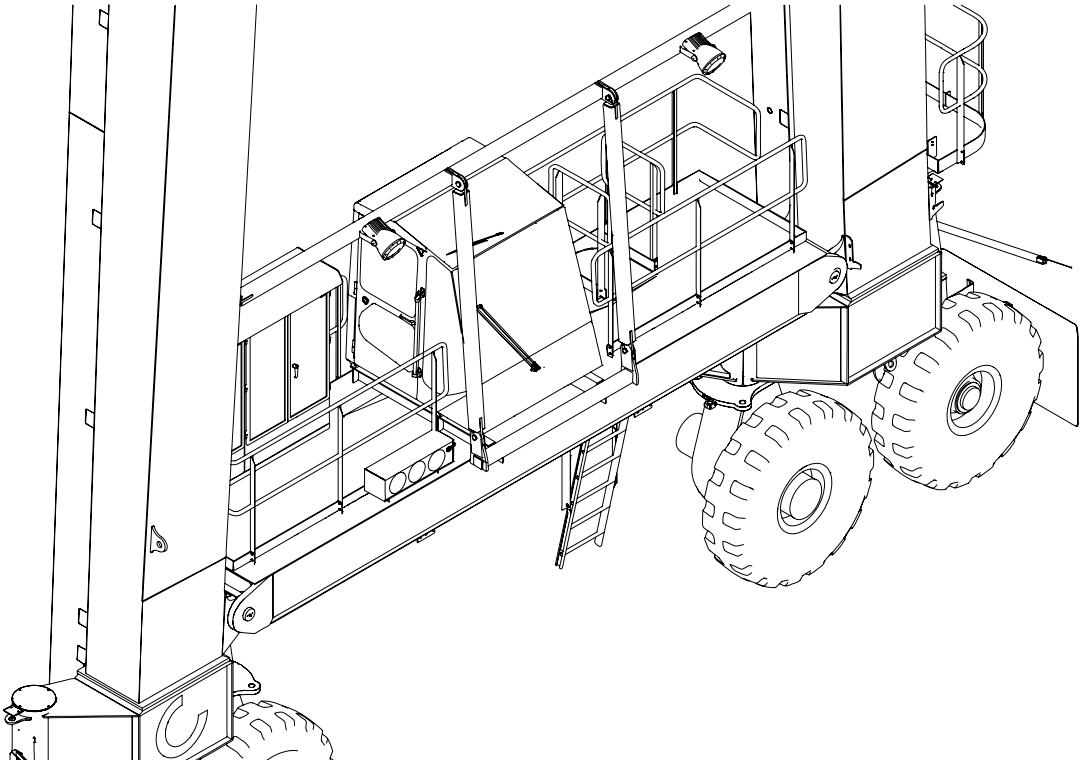

Figure 31. Cabin platform

BOXHUNTER operator's cabin is located on the access side sill beam. The operator can control all crane functions from the operator seat.

The cabin roof consists of a structure that protects the operator from falling objects. There is an extra beam frame around the cabin to increase the cabin safety.

Copyright © (2016) Konecranes. All rights reserved.

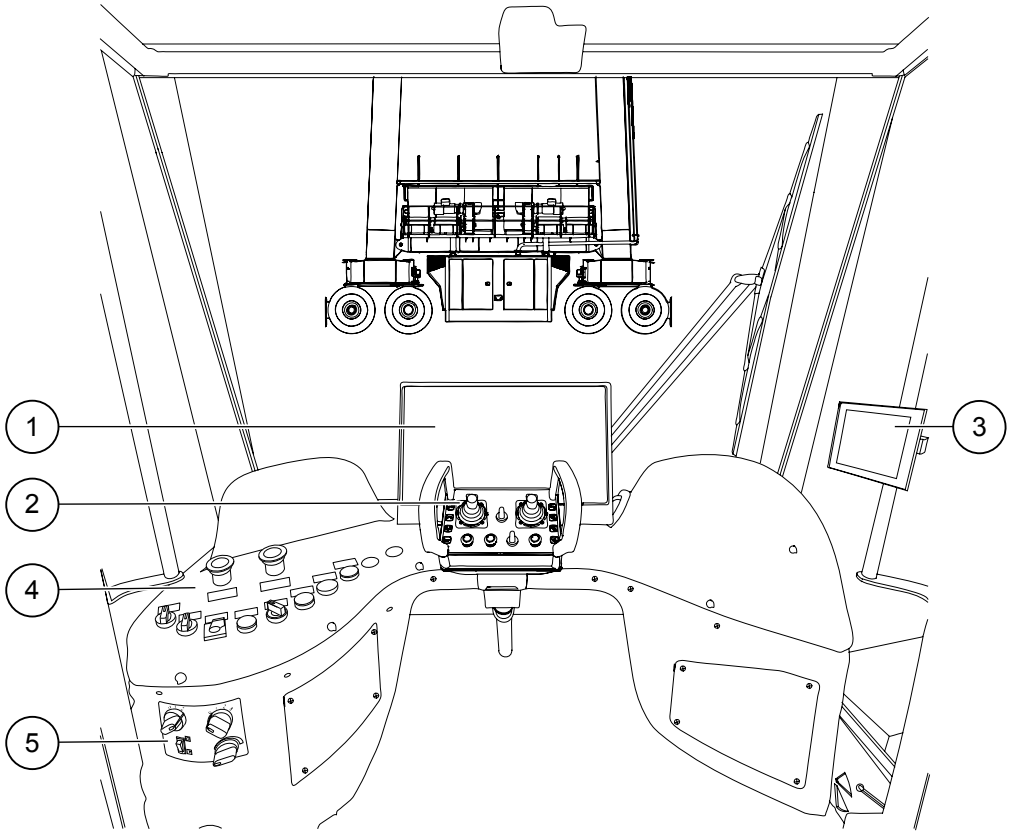

Figure 32. Operator's cabin

1. *Main display with the camera views*
2. *Controller*
3. *Operator panel*
4. *Dashboard*
5. *Air conditioning system*

Camera views are included in the main display.

Dashboard includes controls for the various crane functions.

Operator panel shows, for example, the status of the drives, the hoist and trolley positions to the limits, and the recent events, alarms and faults in the crane system.

Air conditioning unit provides a comfortable working environment for the operator.

Operator can sound a loud alarm horn to warn personnel near the crane.

3.13 Operating interfaces and control devices

3.13.1 Main display

In the operator's cabin, there is a display that functions as a major operating interface, with camera views to the four corners of the spreader, to the top of the container stack, and to the gantry runway.

Copyright © (2016) Konecranes. All rights reserved.

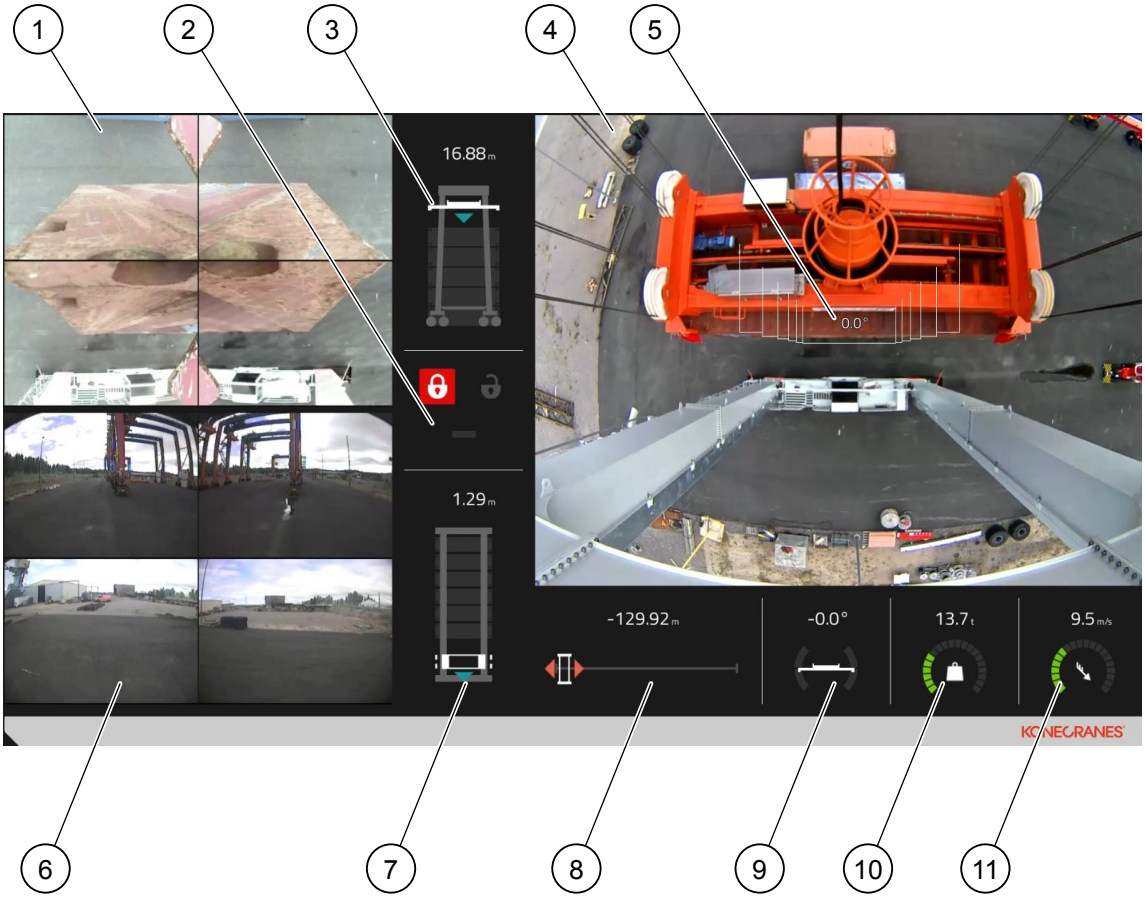

Figure 33. BOXHUNTER main display

1. *Spreader cameras (one camera at each spreader corner)*
2. *Spreader indicator panel*
3. *Hoist position*
4. *Trolley camera (with the view to the top of the spreader / container stack)*
5. *Spreader skew*
6. *Gantry cameras*
7. *Trolley position on the main girder*
8. *Gantry position*
9. *Hoist trim*
10. *Container weight*
11. *Wind speed*

Gantry camera view

Each bogie is equipped with an analog camera which is connected to a video encoder. Encoder integrates the four analog camera signals into a monitoring system.

In the long travel (normal) mode, the gantry camera views are shown on the main display as follows:

3 (Bogie C)	4 (Bogie D)
1 (Bogie A)	2 (Bogie B)

In the cross mode, the gantry camera views are shown on the main display as follows:

Copyright © (2016) Konecranes. All rights reserved.

2 (Bogie B)	3 (Bogie C)
1 (Bogie A)	4 (Bogie D)

NOTE ***In the cross mode, the cameras 1 (on Bogie A) and 4 (on Bogie D) are turned into rear-view mirrors.***

When driving the gantry to the right (in the long travel mode), or forward (in the cross mode), the top row is highlighted to indicate the driving direction and a blue camera symbol appears under the row:

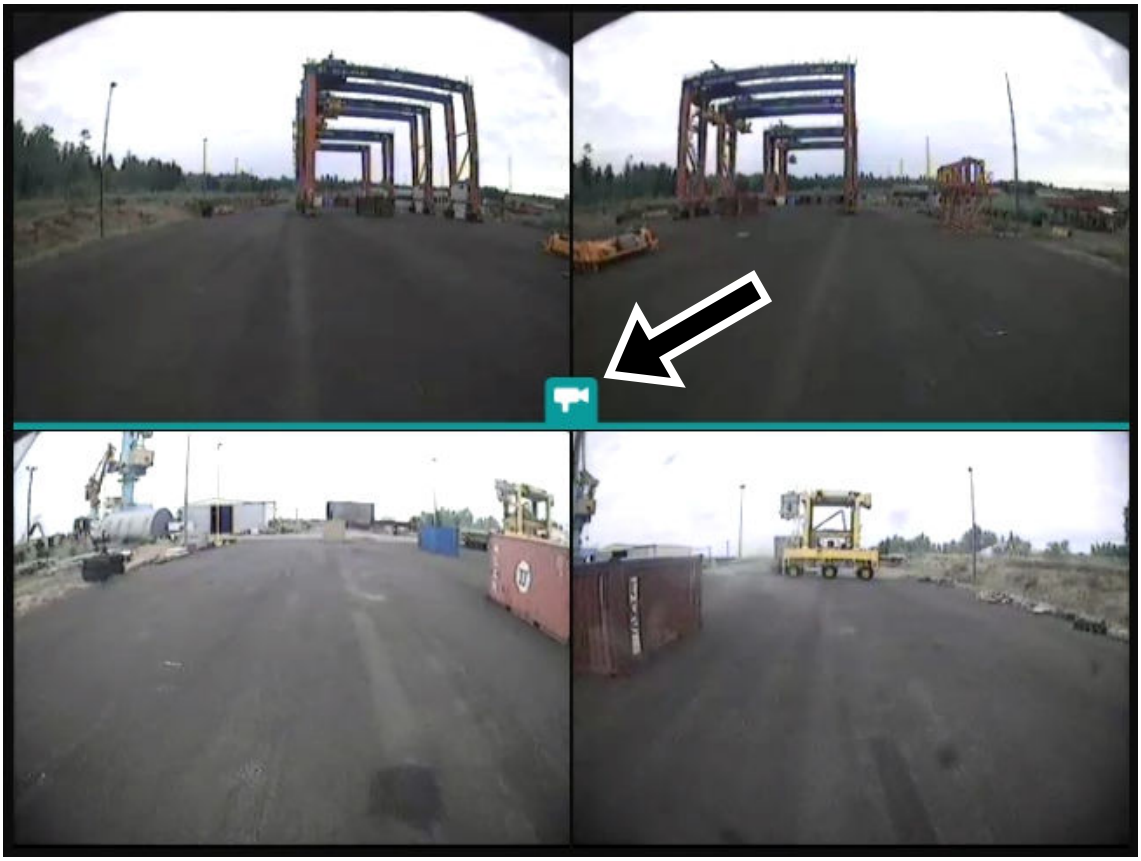

When driving the gantry to the left (in the long travel mode), or backward (in the cross mode), the bottom row is highlighted to indicate the driving direction and a blue camera symbol appears under the row:

Copyright © (2016) Konecranes. All rights reserved.

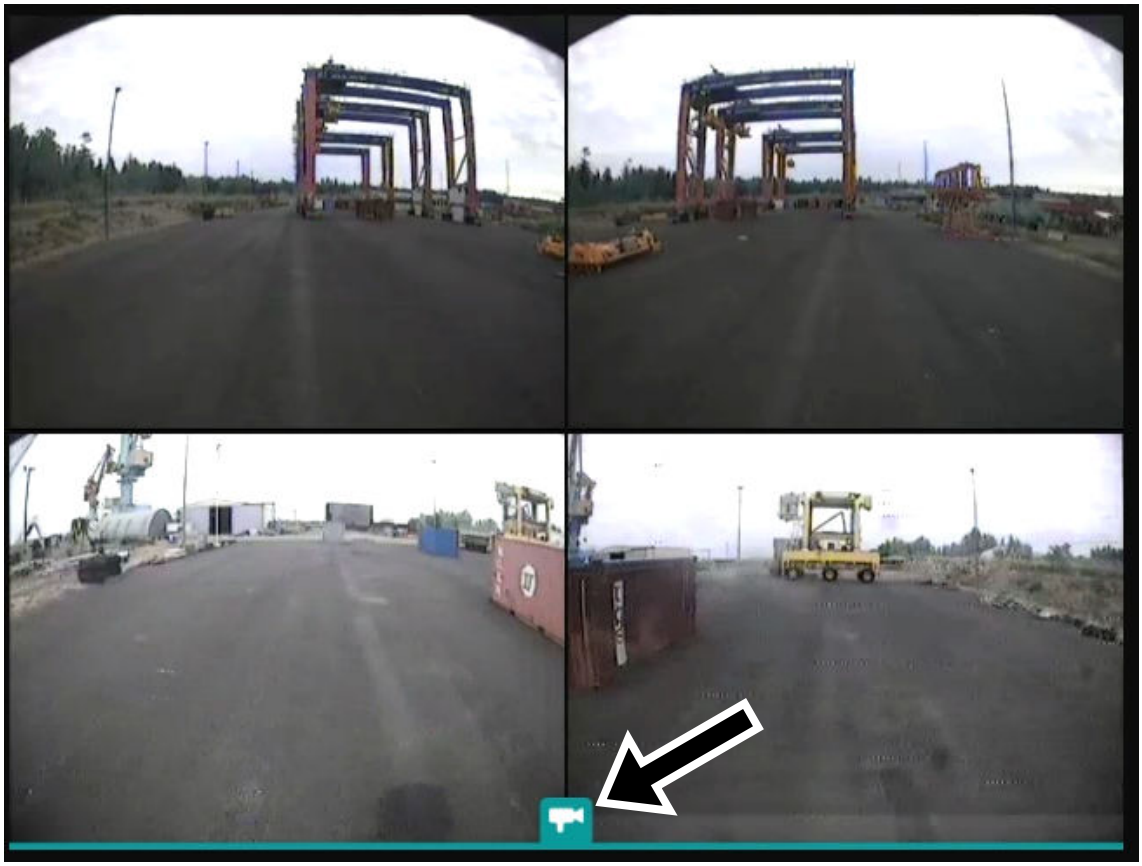

Trolley camera view

BOXHUNTER crane is equipped with a trolley camera mounted under the trolley frame. Trolley camera view with a white crosshair helps the operator to position the trolley above a container or a landing position, before the operator starts lowering the spreader:

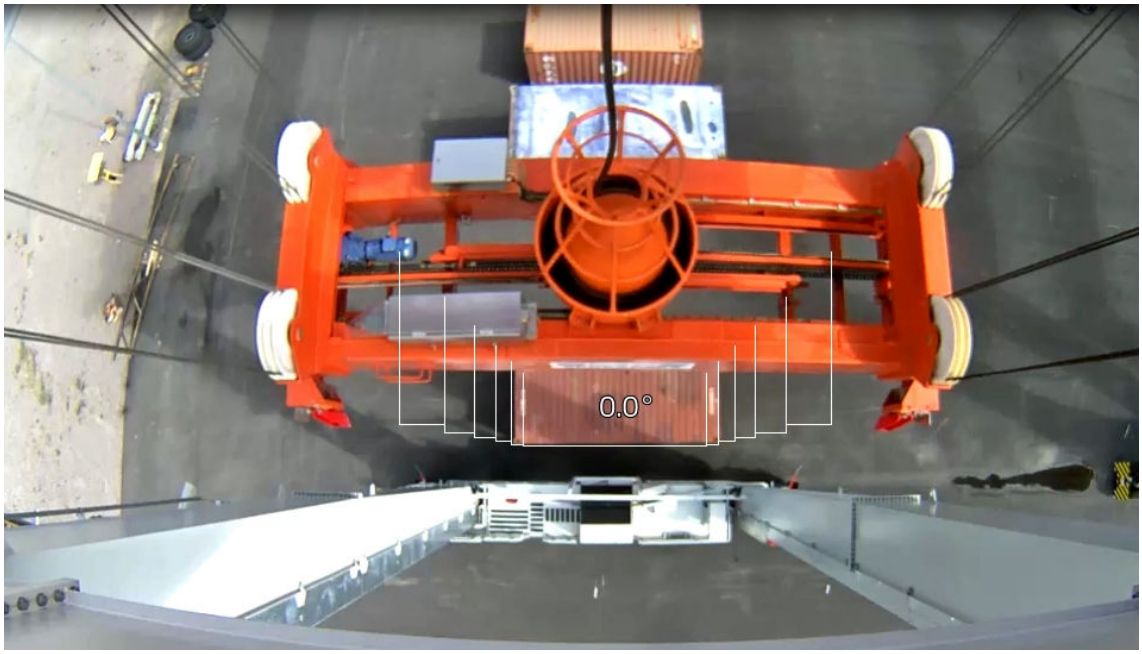

Horizontal lines mark the long edges of the stacked containers under the spreader. Vertical lines mark the ends of the containers.

Copyright © (2016) Konecranes. All rights reserved.

Crosshair starts from the ground level and marks all the container layers of a stack up to the roof of the top container:

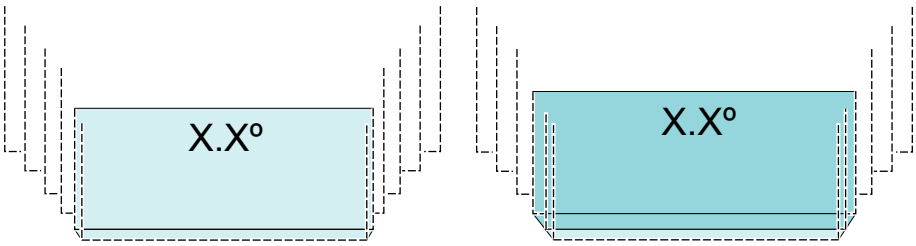

The crosshair view is scaled according to the standard 20-ft DC container or 40-ft HC container, depending on which spreader length is used:

Table 8. Standard 20-ft DC container dimensions

Length [m]	Width [m]	Height [m]
6.058	2.438	2.591

Table 9. Standard 40-ft HC container dimensions

Length [m]	Width [m]	Height [m]
12.192	2.438	2.896

You can change the spreader length with a selector switch on the controller, and the crosshair setting is automatically changed on the trolley camera view:

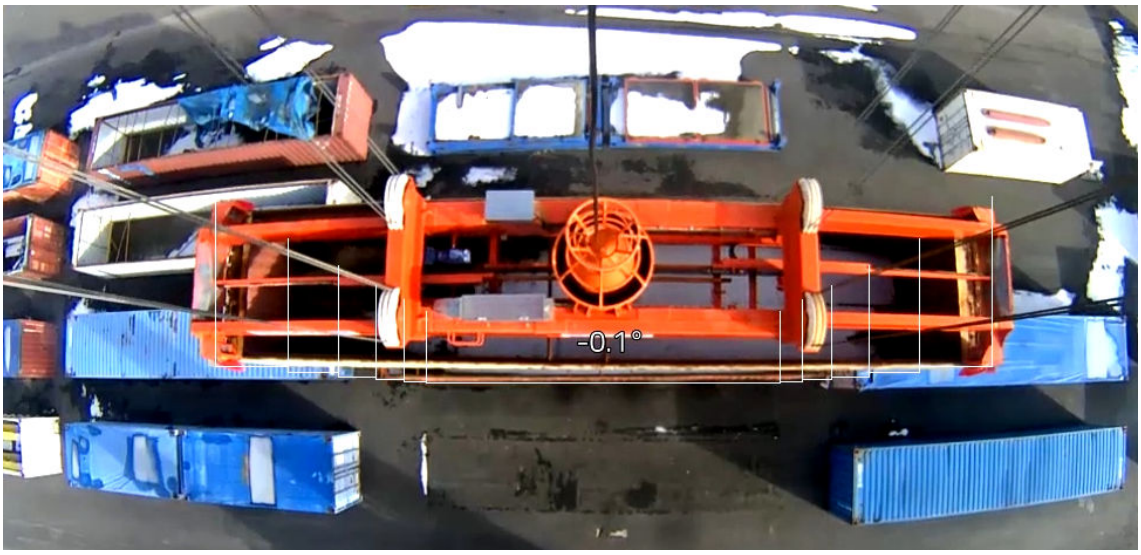

Figure 34. Trolley camera view with the spreader length adjusted for the standard 40-ft HC container

The spreader skew angle is shown in the middle of the crosshair view and lined with the edge of the top container.

You can zoom in and out the trolley camera view by one level with a button on the controller.

Copyright © (2016) Konecranes. All rights reserved.

Spreader camera view

Each spreader corner is equipped with an analog camera. Encoder integrates these four analog camera signals into a monitoring system, which helps targeting the spreader on top of a container.

When the spreader is approaching the container, ensure with the gantry and trolley motions and with the spreader skew that the camera view to each container corner is kept symmetrical. This helps you to position the spreader in a correct manner:

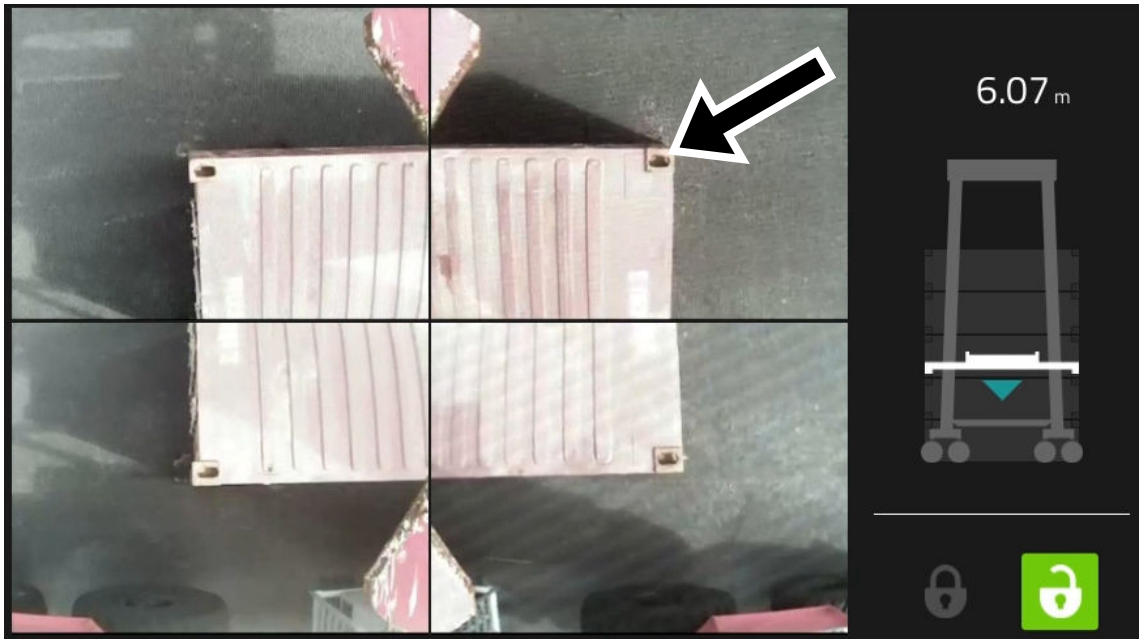

When the spreader has landed on top of the container correctly, the camera views to the container / spreader corners are symmetrical:

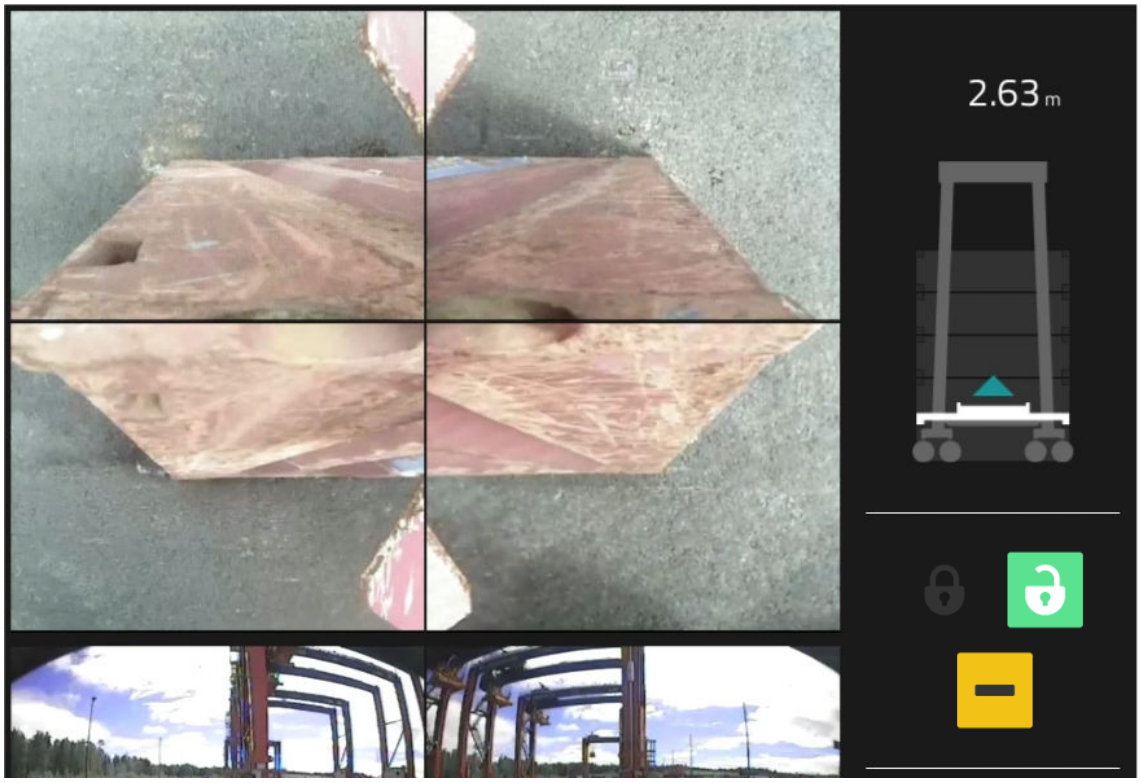

Copyright © (2016) Konecranes. All rights reserved.

If the camera views are not symmetrical, check and correct the alignment of the spreader cameras if necessary:

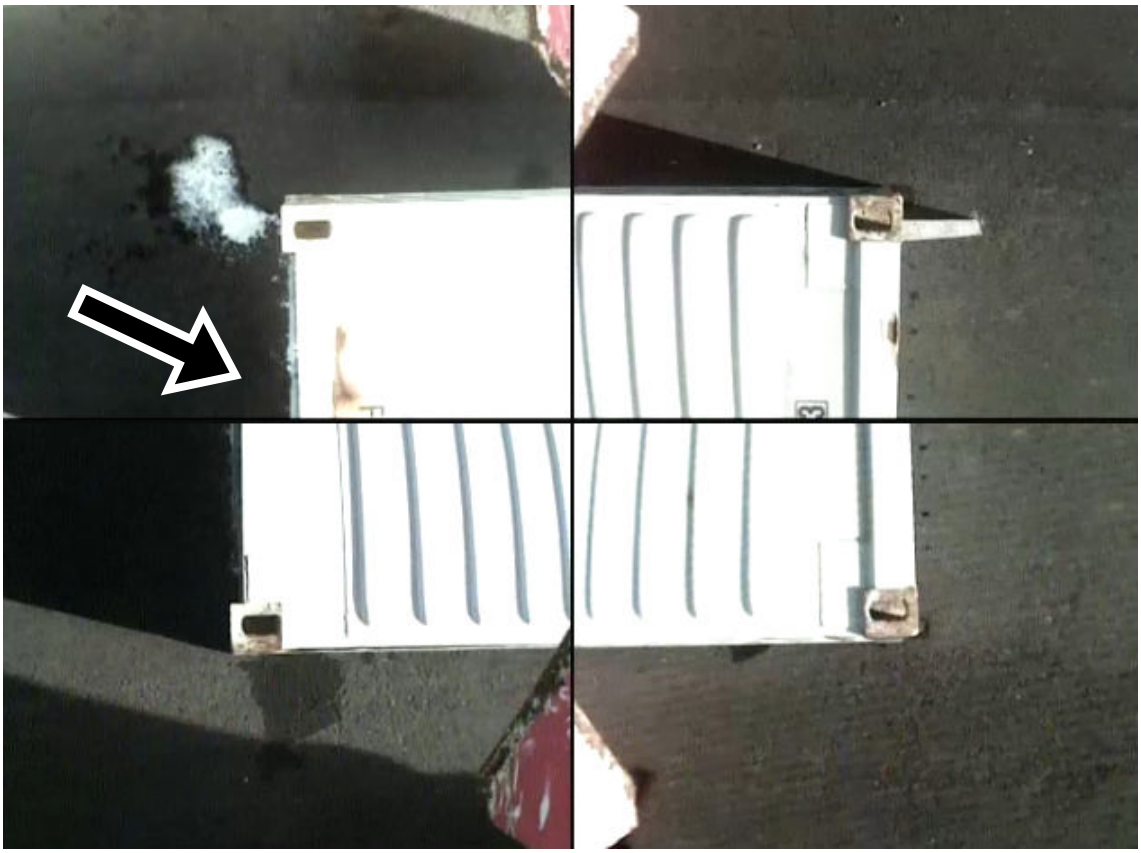

Check also from the trolley camera view that the spreader is correctly positioned above the container. The crosshair horizontal line must be set along the long edge of the first container on the ground level, otherwise the spreader camera views are not symmetrical:

Spreader indicator panel

In the middle of the main display, there is a small panel with indicator lights for the spreader functions.

Copyright © (2016) Konecranes. All rights reserved.

Twistlocks Locked indicator

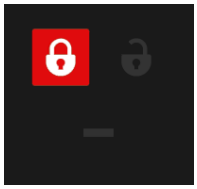

The **Twistlocks Locked** indicator light illuminates only when all four twistlocks (at the corners of the spreader) are locked. The indicator confirms when a container is correctly attached to the spreader, and you can start lifting the container.

Spreader Landed indicator

There is a feeler pin on each corner of the spreader. As the spreader lands onto the top of a container, the feeler pins are pushed upwards into the spreader. Each feeler pin actuates a limit switch to indicate when the corner is fully landed onto the container.

Spreader Landed indicator light illuminates when the spreader is correctly landed onto a container (that is, when all four feeler pins are actuated).

Twistlocks Unlocked indicator

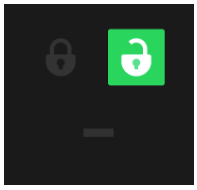

Twistlocks Unlocked indicator light only illuminates when all four twistlocks (at the corners of the spreader) are unlocked. This indicator confirms when the container is separated from the spreader, and the spreader can be lifted.

Copyright © (2016) Konecranes. All rights reserved.

3.13.2 Controller

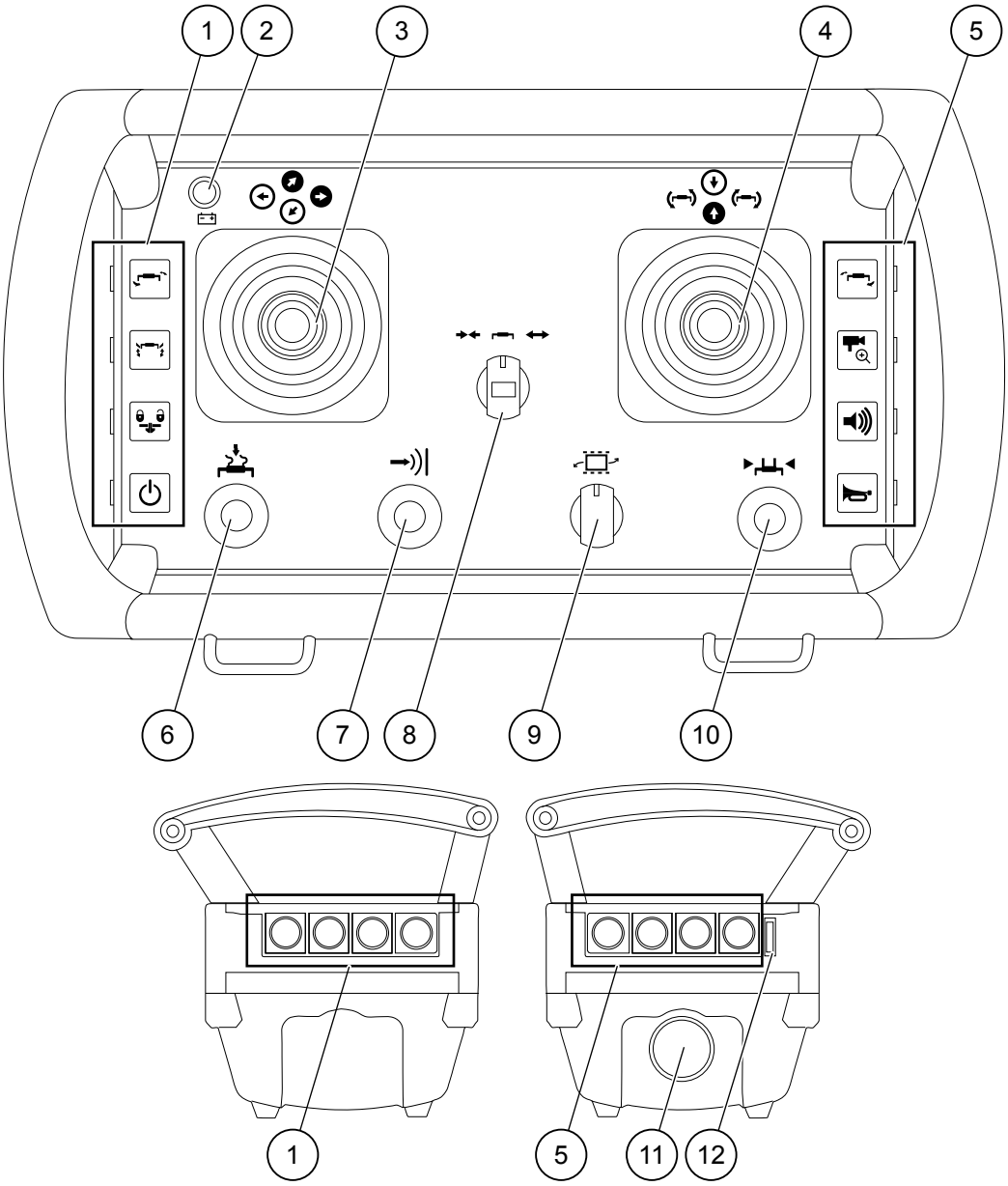

Figure 35. BOXHUNTER controller

1. *Push-buttons for Skew CCW, Twistlocks Locked / Unlocked, Crane ON*
2. *Controller status light*
3. *Left joystick (for gantry, trolley movements)*
4. *Right joystick (for hoist, trim movements)*
5. *Push-buttons for Skew CW, Camera Zoom, Radio PPT, Horn*
6. *Slack Rope Bypass*
7. *Collision Avoidance Bypass*
8. *Spreader Retract / Extract*
9. *Gantry Steering*
10. *Antisway Bypass*
11. *Emergency Stop*
12. *iLOG*

Copyright © (2016) Konecranes. All rights reserved.

Pos.	Symbol	Crane operation
1		Push-button: Skew Counter-Clockwise Adjust the spreader skew counter-clockwise.
		Push-button: Flippers Up / Down NOT in use.
		Push-button: Twistlocks Locked / Unlocked Lock or unlock the twistlocks in the spreader corners. When all the twistlocks are locked to the container, you can start lifting the container.
		Crane ON Switch on the controller, and the power supply of the crane drives.
2		Controller status light When the light is on, the controller power is on.
3		Left joystick: Gantry Right / Left; Trolley Forward / Backward Drive the gantry to the right or left along the runway by deflecting the joystick to the right or left. Drive the trolley forward or backward along the main girder by deflecting the joystick forward or backward. In the gantry cross travel mode, trolley driving is normally inhibited, and the forward and backward movement of the joystick is used for gantry cross travel.
4		Right joystick: Hoist Up / Down; Trim Right / Left Lift or lower the spreader (with or without the container) by deflecting the joystick backward or forward. Adjust the hoist trim (change the inclination angle of the spreader longitudinal axis) by deflecting the joystick to the right or left.

Copyright © (2016) Konecranes. All rights reserved.

Pos.	Symbol	Crane operation
5		Push-button: Skew Clockwise Adjust the spreader skew clockwise.
		Push-button: Camera Zoom Zoom in or out the trolley camera view in the main display. You can zoom in or out the view only by one zoom level.
		Push-button: Radio PTT Activate a Push-to-Talk radio transmitter (if installed).
		Push-button: Horn
6		Push-button: Slack Rope Bypass Bypass the slack rope prevention functionality by pressing the button continuously. It allows you to lower the spreader down even with slack ropes. Bypass is stopped when you release the button.
7		Push-button: Collision Avoidance Bypass Bypass the collision avoidance system (ultrasonic sensors or catwhisker limit switches) by pressing the button continuously. Bypass is stopped when you release the button.
8		Spring-return selector switch: Spreader Retract / Extract Retract (shorten) the spreader by turning the switch counter-clockwise. Extract (lengthen) the spreader by turning the switch clockwise.
9		Spring-return selector switch: Gantry Steering Steer the gantry driving to the left by turning the switch counter-clockwise. Steer the gantry driving to the right by turning the switch clockwise.

Copyright © (2016) Konecranes. All rights reserved.

Pos.	Symbol	Crane operation
10		Push-button: Antisway Bypass Bypass the sway control functionality by pressing the button continuously. Bypass is stopped when you release the button.
11		Push-button: Emergency Stop Push the button to activate the emergency stop; turn the button to release it.
12		iLOG (electronic key) iLOG connects the controller (=a radio transmitter) with the radio receiver. With the iLOG key, you can activate a spare controller in the event of a damage to the existing controller.

3.13.3 Dashboard

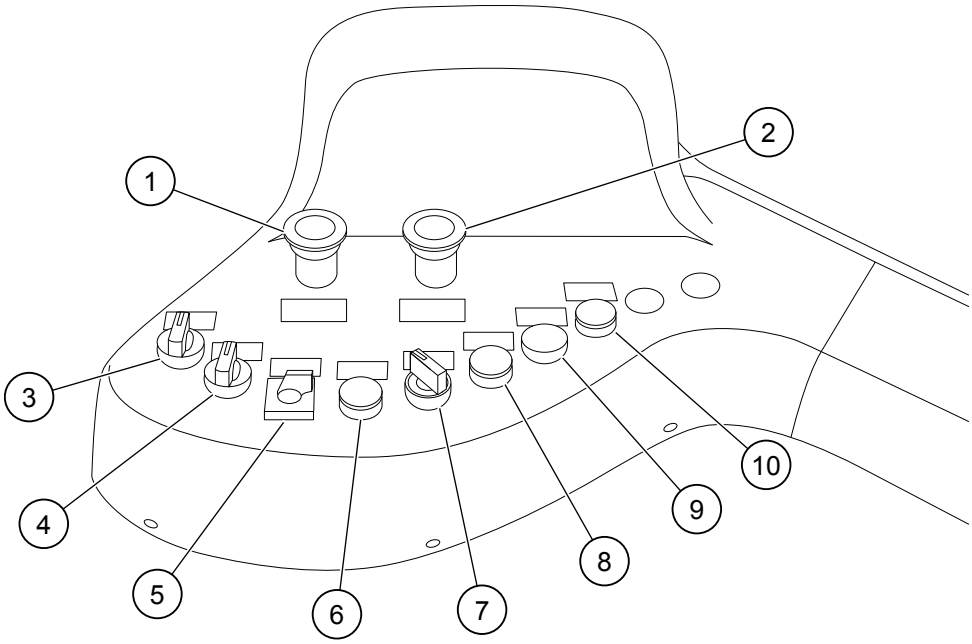

Figure 36. Boxhunter dashboard

1. *Emergency Stop*
2. *Diesel Emergency Stop*
3. *Windshield Wiper (front and roof)*
4. *Windshield Wiper (rear)*
5. *Wheel Position*
6. *Bogie Turning Retry*
7. *GPS*
8. *Diesel Start*
9. *Diesel Stop*
10. *Diesel Fault*

See more detailed description of each function as follows.

Copyright © (2016) Konecranes. All rights reserved.

Pos.	Function	Description
1	Emergency Stop	Emergency stop stops all crane movements.
2	Diesel Emergency Stop	Diesel emergency stop stops the diesel engine.
3	Windshield Wiper (front and roof) selector switch	1 = wiper 2 = washer
4	Windshield Wiper (rear) selector switch	1 = wiper 2 = washer
5	Wheel Position selector switch	1 = normal 2 = cross 3 = park
6	Bogie Turning Retry push-button	Use this push-button when the wheel position change fails with the switch (5), for example, because of friction between the bogies and the ground, or due to some other obstacle. Push-button lamp is always illuminated (a steady light) when all the bogies are locked in a correct alignment and gantry travel is possible.
7	GPS selector switch	1 = OFF 2 = auto-steering 3 = auto-positioning (option)
8	Diesel Start (push-button)	Push-button starts the diesel engine.
9	Diesel Stop (push-button)	Push-button stops the diesel engine.
10	Diesel Fault indicator light	The red indicator light is ON when there is a fault situation in the diesel alternator set.

3.13.4 Operator panel

Copyright © (2016) Konecranes. All rights reserved.

The BOXHUNTER operator panel provides access to the easy-to-use displays of the measurements and operating parameters that are used by the programmable logic controller (PLC) system.

Operator panel is mounted into the operator's cabin, at a suitable position for using when the operator is seated in the chair. The panel shows the current values of the most important operating parameters and provides a list of any faults, alarms, and warning messages that the PLC system has received while monitoring the control equipment. The panel also provides some facilities to reset the automatic control systems after a fault has been cleared.

The display pages are configured by Konecranes to provide the appropriate information for the operation and maintenance of the BOXHUNTER crane.

The display panel includes a touch-sensitive screen for commanding all of its functions (there are no separate push-buttons or a keyboard). The touch-sensitive screen provides an intuitive interface, with a "touch-button" for each function being displayed on the screen.

All the 3D buttons have the same basic functioning logic for showing the difference between being untouched or touched:

Buttons on the touch-sensitive screen

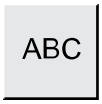

Untouched
In this state, the 3D button has a light edge on the left side and on the top, and a dark edge on the right side and at the bottom (similar to the light and shadow on a protruding button). The text color is black and the button color is pale gray.

Touched
In this state, the 3D button has a dark edge on the left side and on the top, and a light edge on the right side and at the bottom (similar to the light and shadow on a pushed button). The text color is pale gray and the button color dark gray.

Interlocked
In this state, the button remains insensitive when pressed, and the color of the text has changed to simulate an unilluminated push-button (pale gray).

The operation of the touch-sensitive buttons is basically no different from pressing conventional keys with a finger.

NOTICE

DAMAGED SCREEN SURFACE RISK

Pressing the touch buttons with a pointed or sharp object may damage the surface of the screen permanently.

Press the touch buttons with a finger only.

Logging in to the operator panel

The following access levels are provided with the BOXHUNTER crane:

1. *Operator (no passcode required)*
2. *Maintenance person (service level, a passcode required)*

Accessing the service level operations always requires logging in:

1. Wait that the **Welcome** screen changes into the **Main** Information page, and press the user icon on the right bottom corner:

Copyright © (2016) Konecranes. All rights reserved.

2. Enter a 4-digit passcode in the numeric keypad that appears. If you have problems, edit your entry:
   2.1 To correct a mistake, press **BS** (Backspace)
   2.2 To cancel your entry, press **CLR** (Clear)
   2.3 To exit the numeric keypad, press **ESC** (Escape).

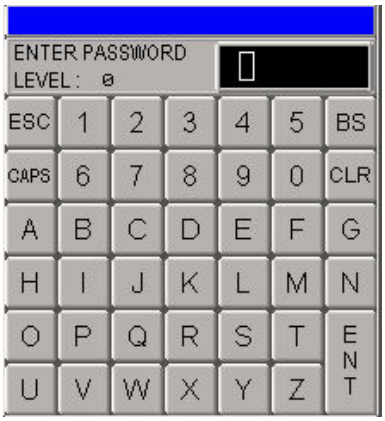

3. Press **ENT** (Enter).
   When the PLC system accepts the passcode, the **Main** Information page reopens again with the service level access.

4. Press the arrow on the left side of the **Main** Information page, and the **Main Menu** page opens for further page selections:

Copyright © (2016) Konecranes. All rights reserved.

Crane status light

Crane status light on the bottom left corner of the operator panel gives a quick indication of the crane operational status. When you press the light icon, the Diagnostics screen with active events, alarms, and faults opens.

When the main contactor is turned off, the status light is gray.

When the main contactor is turned on and there are no active alarms or faults, the status light is green.

During the crane startup, the green status light is blinking.

When there is an active alarm, the status light is yellow and blinking (overrides the green status light).

When there is an active fault, the status light is red and blinking (overrides the green or yellow status light).

Main Information page

MAIN MENU> MAIN

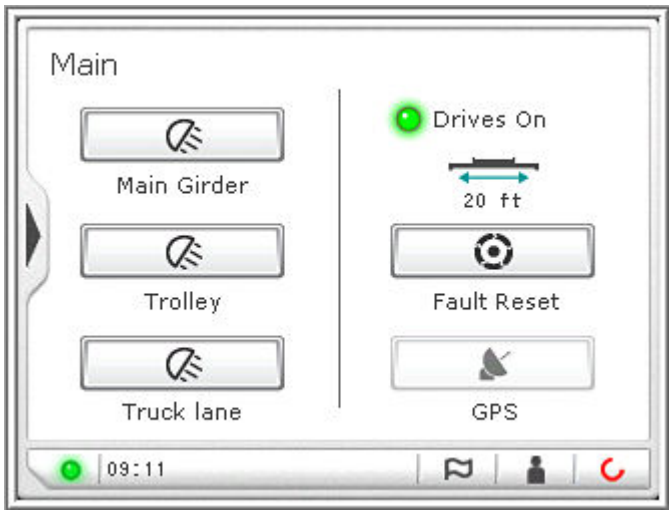

Copyright © (2016) Konecranes. All rights reserved.

After the **Welcome** screen disappears, the operator panel displays the **Main** Information page first.

On the **Main** Information page, you can do the following:

- Set the lights (main girder, trolley, and truck lane lights) ON or OFF.
- Check whether the drives are ON (green lamp) or OFF (gray lamp).
- Check the current length of the spreader (20 or 40 ft).
- Check if any alarm or fault is active (the yellow or red status light in the left bottom corner is blinking).
- Check if any fault requires a reset (the red icon is blinking inside the **Fault Reset** button). Reset the fault by pressing the button.
- Navigate to the **GPS Rail** page via the **GPS** button (the button is activated if a problem with the GPS system occurs. Normally, the button is interlocked (remains insensitive when pressed).
- Navigate to the **Main Menu** page by pressing the arrow on the left side.

Alarm indication on the Main Information page

When an alarm is active, you can see a yellow status light blinking in the left bottom corner of the **Main** Information page:

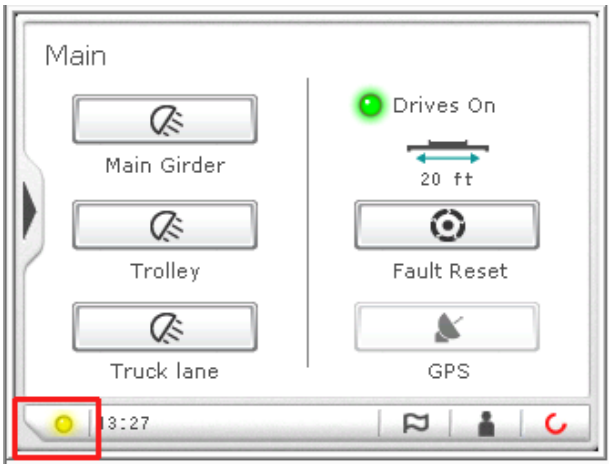

Alarm situation can normally be solved by the operator personnel. You can access more detailed alarm information in the following alternative ways:

Press the blinking (yellow) status light icon.

Press the **Diagnostics** icon on the **Main Menu** page.

Copyright © (2016) Konecranes. All rights reserved.

Fault indication on the Main Information page

When a fault is active, you can see a red status light blinking in the left bottom corner of the **Main** Information page, and a red icon inside the **Fault Reset** button:

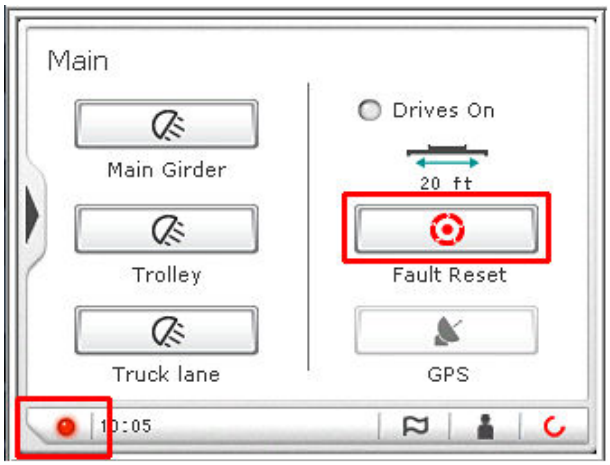

Fault prevents or limits the normal operation of the crane, and usually requires maintenance personnel to solve the situation. You can access more detailed fault information by pressing the red status light icon. You can also view active faults via the **Diagnostics** page.

If the fault requires a system reset, the red icon is blinking inside the **Fault Reset** button of the **Main** Information page. Reset the fault by pressing the button.

Main Menu

From the **Main Menu** page, you can navigate to the following pages:

1. ***Main*** *(Main Information page)*
2. ***Diagnostic****: Active Events/Alarms/Faults, History log*
3. ***Monitoring****: Hoist Limits, Loads, Trolley Limits, GPS, Controller*
4. ***Settings****: Night Mode, Collision Avoidance, Trim Memory, Trolley Motions, Auto Twistlocks*
5. ***Service****: Maintenance Mode, Single Mode, Skew, Bypass.*

Diagnostics page

MAIN MENU > DIAGNOSTICS

BOXHUNTER crane has a comprehensive diagnostics system that uses the PLC system for monitoring the whole plant and the equipment. Any events, alarms, or faults are shown on the **Active** and/or **History** tabs of the **Diagnostics** page.

Copyright © (2016) Konecranes. All rights reserved.

Active tab

MAIN MENU > DIAGNOSTICS

List of the active event/alarm/fault messages can be viewed on a separate tabbed window:

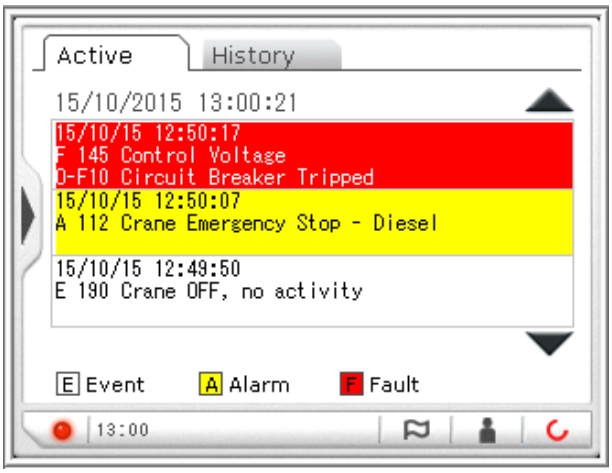

The list of active events, alarms, and faults is sorted by initiation time, with the most recent item at the top of the list.

To view different parts of the list and to select a specific item on the list, press either of the scroll buttons (top / down).

To get more detailed information on a certain event, alarm or fault, tap anywhere on the selected message row. The message may contain a suggestion for maintenance actions to clear out the problem. It may also include details of the PLC input, the equipment location on the mechanical or electrical drawings, and software references on the structured analysis diagrams.

NOTE ***When an event, alarm or fault condition is cleared, the item is removed automatically from the Active tab list. If a fault requires a separate reset (use the Fault Reset button on the Main Information page), it is cleared from the Active tab list only after the reset.***

Each item on the Active tab list contains the following information:

Parameter	Description
Start time	Time when the event/alarm/fault occurred (hours : minutes : seconds). Date when the even/alarm/fault occurred (day / month / year).
Type	E = Event: caused by a normal operation, such as a tripped end limit. Event does not require any action from the operator. A = Alarm: caused by malfunction or misuse of the crane. Alarm situation can normally be solved by the operator. F = Fault: caused by crane malfunction that prevents or limits the normal crane operation. Fault situation can usually be solved by the maintenance personnel.
Identification number	Each defined event/alarm/fault is given a unique identification number in the PLC software (in the example screenshot: A 112).

The PLC system can display the maximum of 34 active items at a time.

History tab

MAIN MENU > DIAGNOSTICS

Copyright © (2016) Konecranes. All rights reserved.

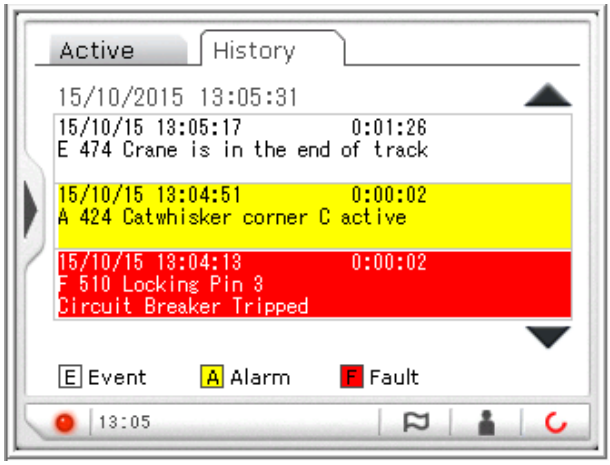

PLC system maintains a history log of recent event/alarm/fault messages (even after an event, alarm, or fault has been cleared). The history log can be a useful tool for maintenance troubleshooting.

To select the history window, press the **History** tab.

The **History** log content is sorted by the initiation time, with the most recent item at the top of the list. When an event, alarm or fault is active, it is visible both in the **Active** tab and in the **History tab**. But once the item is cleared, it is removed from the **Active** tab list. After clearance, the **History tab** also shows the duration time of each event, alarm, and fault. To view different parts of the list and to select a specific item on the list, press either of the scroll buttons (top or down).

To get more detailed information on a certain event, alarm or fault, tap on the selected message row (for example, the row with Alarm 424 in the previous view):

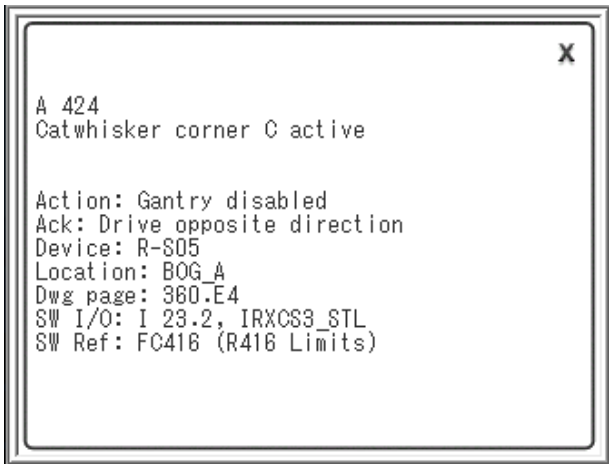

NOTE ***The memory that is used for storing the history log is of a limited size. The log memory can contain the maximum of 350 events/alarms/faults. When this limit has been reached and a new event/alarm/fault occurs, the oldest log item is overwritten.***

Monitoring page

MAIN MENU > MONITORING

Copyright © (2016) Konecranes. All rights reserved.

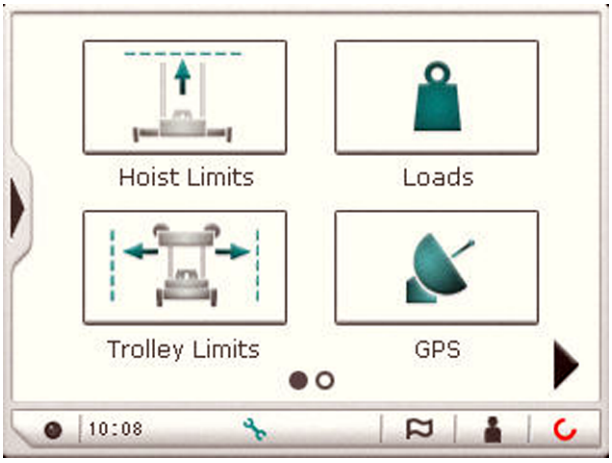

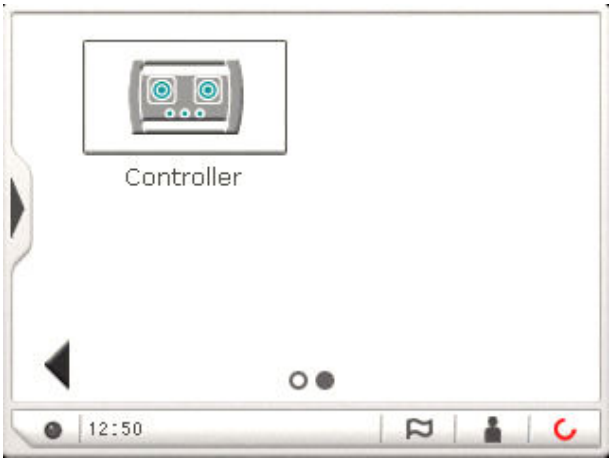

On the **Monitoring** page, you can monitor the following:

- Hoist position to the slowdown and stop limits, hoist height, and hoist position difference
- Load measurement data
- Trolley position to the slowdown and stop limits, and to the truck lane
- GPS and the auto-steering system
- Controller joystick and gantry steering selector switch functionality (deflection measurement).

Hoist Limits page

MAIN MENU > MONITORING > HOIST LIMITS

Copyright © (2016) Konecranes. All rights reserved.

Hoist Limits page indicates the current load / counterweight distance to the limit switches (in up and down movement) for each hoisting machinery. The page also shows important (hoist height, hoist position difference) measurements for the hoisting machineries.

Table 10. Status flags

Parameter	Description
Up: Safety limit	red = limit tripped (active); green = limit not tripped
Up: Software stop limit	white = limit tripped (active); green = limit not tripped Distance from the ground level (in meters).
Down: Counterweight stop	red = limit tripped (active); green = limit not tripped

Table 11. Measured values

Parameter	Description
Hoist height	The current measured values from the absolute encoders (one for each hoist machinery). These values are scaled in meters above ground level (to the bottom of the spreader).
Hoist position difference	The current calculated difference value of the two hoist encoders.

For more information, see also chapter *Hoist intelligent slowdown and stop*.

Loads page

MAIN MENU > MONITORING > LOADS

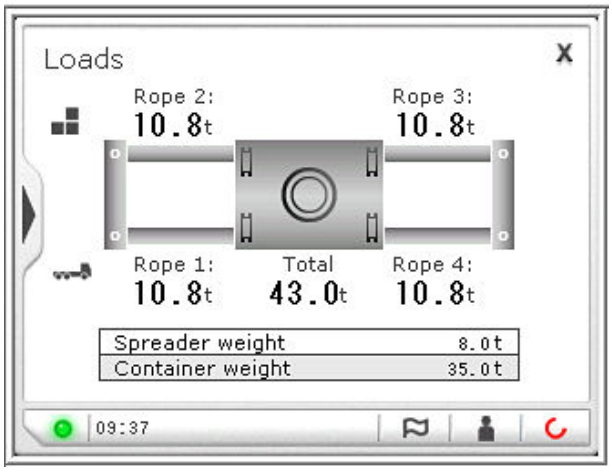

The **Loads** page contains important load measurement data on each hoist rope.

Copyright © (2016) Konecranes. All rights reserved.

Table 12. Calculated values

Parameter	Description
Rope 1...4	Calculated load on each rope.
Total	The total calculated hoist load, that is, the sum of individual rope loads.
Spreader weight	Tare weight of the spreader.
Container weight	Weight of the container.

Trolley Limits page

MAIN MENU > MONITORING > TROLLEY LIMITS

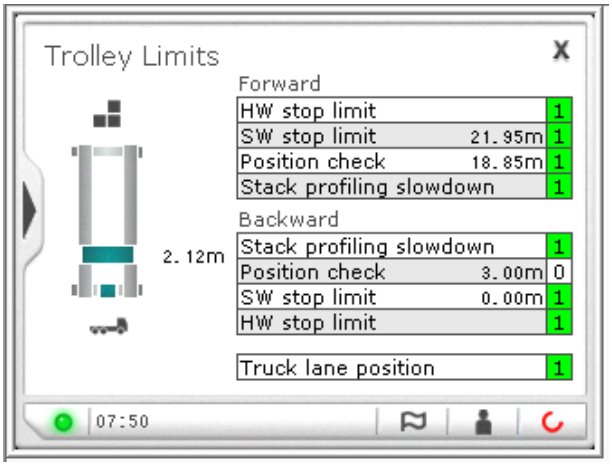

Trolley Limits page contains status information on the trolley position and distance to the different slowdown and stop limits in the backward-forward axis (for the trolley traverse):

- **HW stop limit** refers to the mechanical limit switch of the trolley
- **SW stop limit** refers to the software limit calculated by the PLC system
- **Position check** refers to the magnetic limit switch
- **Stack profiling slowdown** refers to the laser scanner.

In addition, the **Trolley limits** page shows the trolley position in relation to the truck lane on the ground.

Table 13. Status flags for the trolley position to the slowdown and stop limits

Parameter	Description
HW stop limit forward	Green, value 1 = limit not tripped Red, value 0 = limit tripped (active)
SW stop limit forward	Green, value 1 = limit not tripped White, value 0 = limit tripped (active)
Position check forward	Green, value 1 = trolley position between the position check limit forward and the SW stop backward White, value 0 = trolley position between the position check limit forward and the SW stop forward

Copyright © (2016) Konecranes. All rights reserved.

Parameter	Description
Stack profiling slowdown forward	Green, value 1 = limit not tripped White, value 0 = slowdown limit tripped (active)
Stack profiling slowdown backward	Green, value 1 = limit not tripped White, value 0 = slowdown limit tripped (active)
Position check backward	Green, value 1 = trolley position between the position check limit backward and the SW stop forward White, value 0 = trolley position between the position check limit backward and the SW stop backward
SW stop limit backward	Green, value 1 = limit not tripped White, value 0 = limit tripped (active)
HW stop limit backward	Green, value 1 = limit not tripped Red, value 0 = limit tripped (active)

Table 14. Status flags for trolley position to the truck lane

Parameter	Description
Truck lane position	Green, value 1 = trolley above the truck lane White, value 0 = trolley above a stack

For more information on the trolley traverse limit switches and interlocks, see chapters *Trolley traverse* and *Stack collision prevention*.

GPS page

MAIN MENU > MONITORING > GPS

Copyright © (2016) Konecranes. All rights reserved.

GPS Rail

MAIN MENU > MONITORING > GPS > GPS Rail

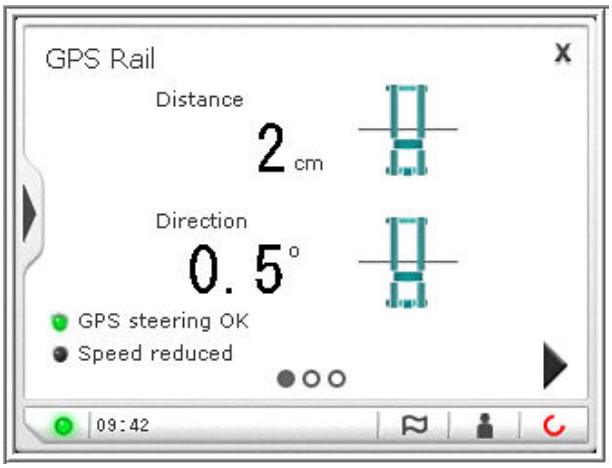

The **GPS Rail** page has status flags for the Global Positioning System (GPS) and for its associated auto-steering system (in the PLC system).

It also shows the current values of two GPS calculated variables.

You can also navigate to the **GPS Rail** page directly via the **Main** Information page in a situation when a problem occurs with the GPS.

Table 15. Measured values

GPS value	Description
Distance (crane distance to GPS rail)	Current value, which is shown in centimeters.
Direction (crane direction)	Current value, which is shown in degrees.

Table 16. Status flags

Information	Description
GPS steering OK	Auto steering control system check Green = OK; gray = fault
Speed reduced	Green = speed reduced; gray = normal speed This status flag indicates when the maximum gantry travel speed is reduced by the CCS application.

Copyright © (2016) Konecranes. All rights reserved.

GPS Auto Stop

MAIN MENU > MONITORING > GPS > GPS Auto Stop

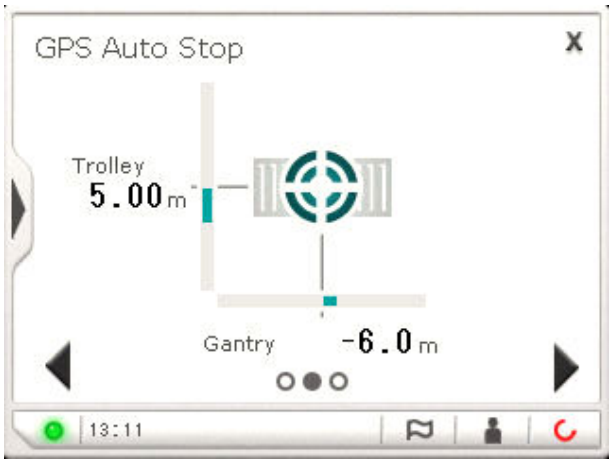

On the **GPS Auto Stop** page, you can check the current gantry / trolley distance to the preset auto-stop positions.

GPS Data

MAIN MENU > MONITORING > GPS > GPS Data

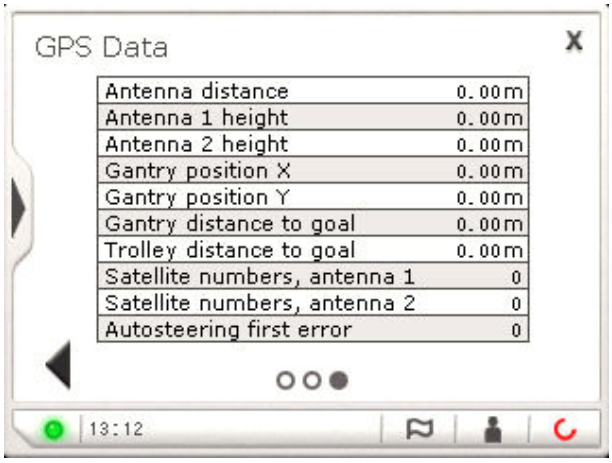

On the **GPS Data** page, you can view parameters related to the operation of the GPS and the positioning of the gantry and the trolley.

Controller page

MAIN MENU > MONITORING > CONTROLLER

Copyright © (2016) Konecranes. All rights reserved.

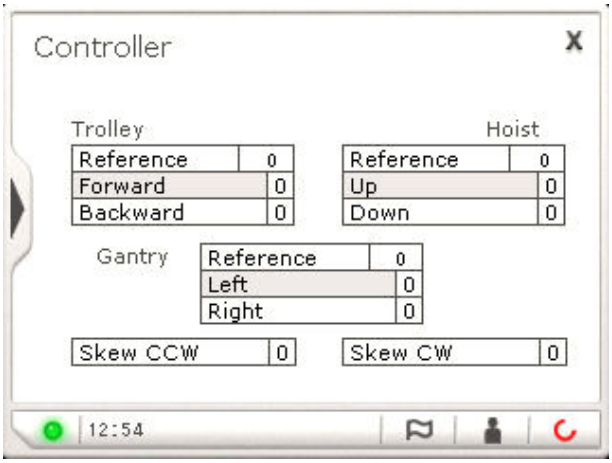

The **Controller** page is mainly for crane commissioning and maintenance purposes. On this page, you can verify the proper functionality of the joysticks and some push-buttons of the controller.

Deflect the left or right joystick to different directions, or press the push-button, and monitor that the corresponding table activates on the **Controller** page.

The activated table shows a measurement value for each joystick movement (right/left, backward/forward) or pushbutton selection (CCW/CW). Check that the value shown is within the given reference value.

Table 17. Status flags for trolley control

Parameter	Description
Trolley Reference	The deflection measurement value for the left joystick movement (forward / backward). The value range is from 0 (minimum) to 255 (maximum).
Trolley Forward	White, value 0 = not active green, value 1 = the left joystick moved forward
Trolley Backward	White, value 0 = not active green, value 1 = the left joystick moved backward

Table 18. Status flags for hoist control

Parameter	Description
Hoist Reference	The deflection measurement value for the right joystick movement (backward / forward). The value range is from 0 (minimum) to 255 (maximum).
Hoist Up	White, value 0 = not active Green, value 1 = the right joystick moved backward
Hoist Down	White, value 0 = not active Green, value 1 = the right joystick moved forward

Copyright © (2016) Konecranes. All rights reserved.

Table 19. Status flags for gantry control

Parameter	Description
Gantry Reference	The deflection measurement value for the left joystick movement (left / right). The value range is from 0 (minimum) to 255 (maximum).
Gantry Left	White, value 0 = not active Green, value 1 = the left joystick moved left
Gantry Right	White, value 0 = not active Green, value 1 = the left joystick moved right

Table 20. Status flags for skew control

Parameter	Description
Skew CCW	White, value 0 = not active Green, value 1 = the push-button pressed
Skew CW	White, value 0 = not active Green, value 1 = the push-button pressed

Settings page

MAIN MENU > SETTINGS

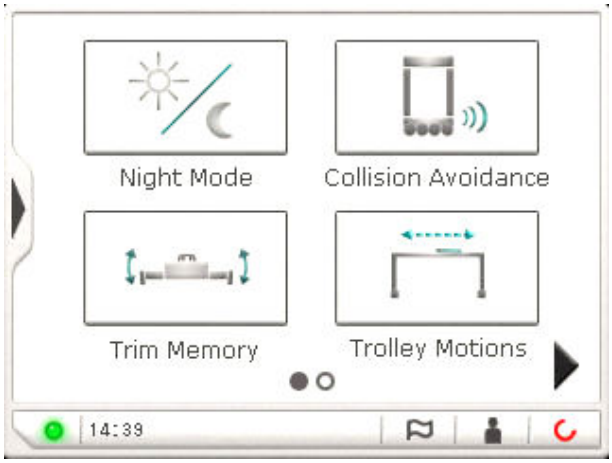

Copyright © (2016) Konecranes. All rights reserved.

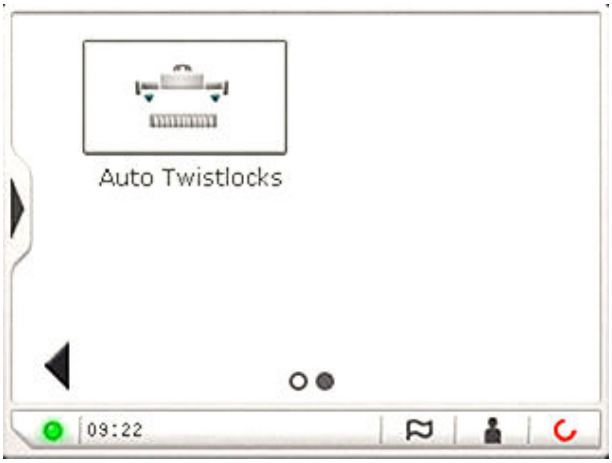

By selecting the buttons on the **Settings** page, you can check and modify various crane functions.

To proceed to the next **Settings** page, touch the right arrow button on the lower right corner of the page.

To go back to the previous page, touch the left arrow button on the lower left corner of the page.

The **Settings** page allows you to configure the following:

- Set the **Main** Information page to the day or night mode to make the page optimal for the current crane operating time
- Adjust the sensitivity of the collision avoidance detectors
- Adjust the hoist trim angle and store the set values
- Control the trolley movement in the gantry cross mode
- Set the automatic twistlocks on or off.

Night Mode page

MAIN MENU > SETTINGS > NIGHT MODE

Copyright © (2016) Konecranes. All rights reserved.

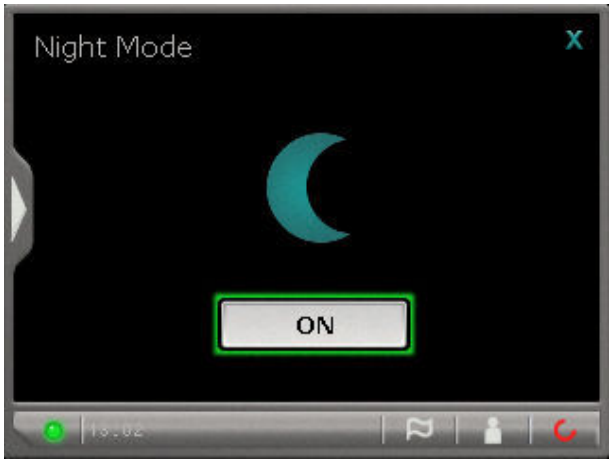

On the **Night Mode** page, you can set the **Main** Information page to the day or night mode to make this most frequently used page optimal for the current crane operating time.

The function button that is visible when accessing this page, shows the current mode of the display. The default value is **ON**.

To change the state, press the function button (**ON** or **OFF**).

Collision Avoidance page

MAIN MENU > SETTINGS > COLLISION AVOIDANCE

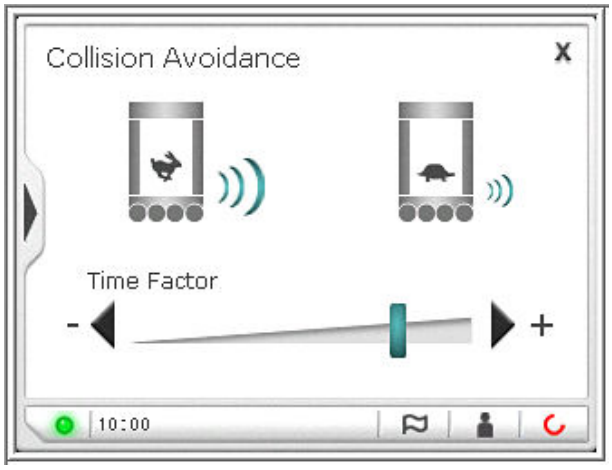

On the **Collision Avoidance** page, you can adjust the sensitivity of the collision avoidance detectors.

The sensitivity of the ultrasonic sensors cannot be adjusted directly. Instead, the PLC software includes a sampling time interval during which the detection signal must remain active.

Increasing the time factor reduces the sensitivity (by ignoring short duration signals from the sensor).

To change the sampling time factor (– = highest sensitivity, + = lowest sensitivity), tap the appropriate icon on the page.

If the ultrasonic sensors become continuously activated due to a bad weather, you can reduce the sensitivity further. However, reducing the sensitivity also increases the time delay before the collision detection system stops the gantry travel. In the reduced sensitivity mode, the gantry traveling speed is limited to slow speed.

Copyright © (2016) Konecranes. All rights reserved.

WARNING! COLLISION HAZARD

The more you reduce the collision avoidance sensitivity, the greater is the risk of missing a warning on time when approaching an obstruction on the runway.

When the collision avoidance sensitivity is set to the minimum, drive the gantry with great care. Make sure that there are no obstructions on the runway.

Trim Memory page

MAIN MENU > SETTINGS > TRIM MEMORY

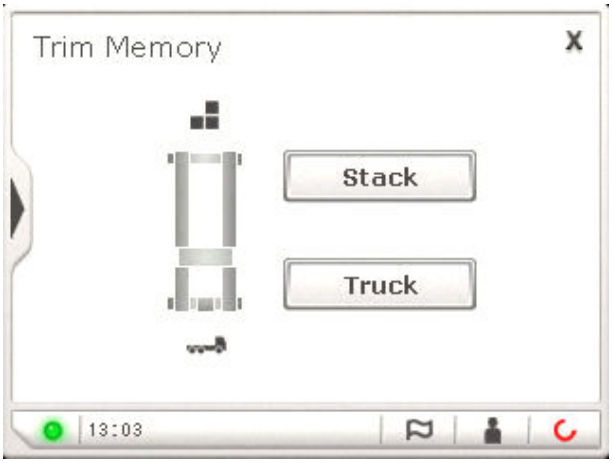

On the **Trim Memory** page, you can set the hoist trim angle and store the hoist trim values to the memory.

To store hoist trim value in the container stack area:

1. *Drive the gantry to the stack area.*
2. *Press the **Stack** button and ensure that the button turns green (= data is stored to the system memory).*
3. *Turn the right joystick right or left to operate hoist trim. Last hoist trim value used is stored to the memory.*

NOTE ***No trim truck values are stored in the stack area.***

To store hoist trim value in the truck lane:

1. *Drive the gantry to the truck lane.*
2. *Press the **Truck** button and ensure that the button turns green (= data is stored to the system memory).*
3. *Turn the right joystick right or left to operate hoist trim. Last hoist trim value used is stored to the memory.*

NOTE ***No trim stack values are stored in the truck lane area.***

Trolley Motions page

MAIN MENU > SETTINGS > TROLLEY MOTIONS

Copyright © (2016) Konecranes. All rights reserved.

On the **Trolley Motions** page, you can control trolley movement in the gantry cross travel mode with a function button (**ON** or **OFF**).

When the gantry cross travel mode is used, it means that the crane is capable of traveling 90 degrees to the normal operating directions. Normally, follow the safe operating principles and keep always the trolley movement **OFF** in the gantry cross travel mode. However, in some situations, you may temporarily have to allow trolley motion in the gantry cross travel mode.

WARNING! UNEXPECTED CRANE OPERATIONS HAZARD

Selecting "Move Trolley in Gantry Cross Mode" ON could cause an unexpected crane operation, which could lead to death, severe personal injury, or material damage.

Keep always the function button OFF, unless you have a valid reason to move the trolley in this mode.

Automatic Twistlocks page

MAIN MENU > SETTINGS > AUTO TWISTLOCKS

On the **Automatic Twistlocks** page, you can set the automatic twistlocks **ON** or **OFF** with a function button. When the automatic twistlocks are **ON**, the spreader, when arriving on top of the container, locks the twistlocks automatically to the corners of the container. This speeds up the container handling of the crane. Unlocking, however, is never automatic, but the operator always unlocks the twistlocks manually with the controller.

The function button shows the current state of “Automatic Twistlocks” (**ON** or **OFF**).

Service page

MAIN MENU > SERVICE

Copyright © (2016) Konecranes. All rights reserved.

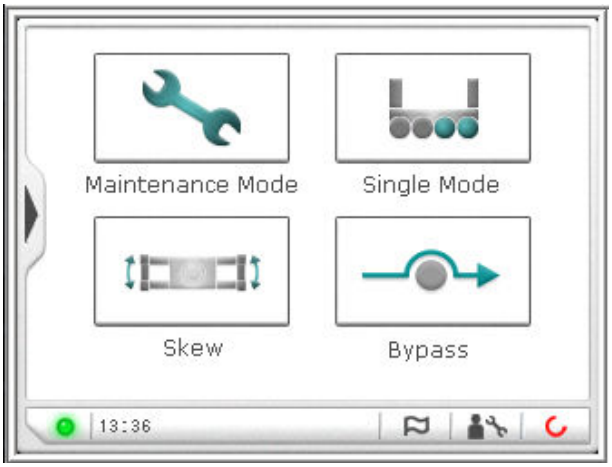

You must be an authorized maintenance person to access the **Service** page. Type in the correct password using the numeric keypad and press “ENT” button.

On the **Service** page, the maintenance personnel can perform the following:

- Set the crane system into the maintenance mode, which is required to carry out certain maintenance tasks
- Investigate the operation of each bogie in the single mode and calibrate the position encoders
- Calibrate the skew of the spreader
- Bypass certain functions.

Maintenance Mode page

MAIN MENU > SERVICE > MAINTENANCE MODE

On the **Maintenance Mode** page, you can set the crane system into the maintenance mode. This is required, for example, when a faulty component is detected, and you must be able to move the gantry, the trolley, or the spreader to another place or position where the component replacement or other service can be carried out safely. When the maintenance mode is selected, all crane movements are performed at slow speed.

WARNING! UNEXPECTED CRANE OPERATIONS HAZARD

All software stop limits are bypassed in the maintenance mode. Bypassing the safety interlocks could cause unexpected operation of the crane, which could lead to death, severe personal injury, or material damage.

Do not select the maintenance mode unless you are authorized to perform maintenance operations.

Copyright © (2016) Konecranes. All rights reserved.

NOTE ***You can never bypass the hoisting machinery brake supervision in the maintenance mode.***

The function button that is visible when accessing the **Maintenance Mode** page shows the current state of the crane maintenance mode (**ON** or **OFF**). To change the crane mode, press the function button.

When the maintenance mode is ON, the PLC system sends the following notification to the **Diagnostics** page:

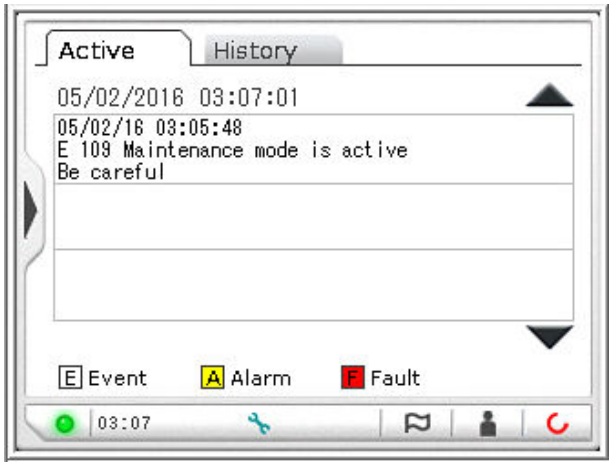

Single Mode page

MAIN MENU > SERVICE > SINGLE MODE

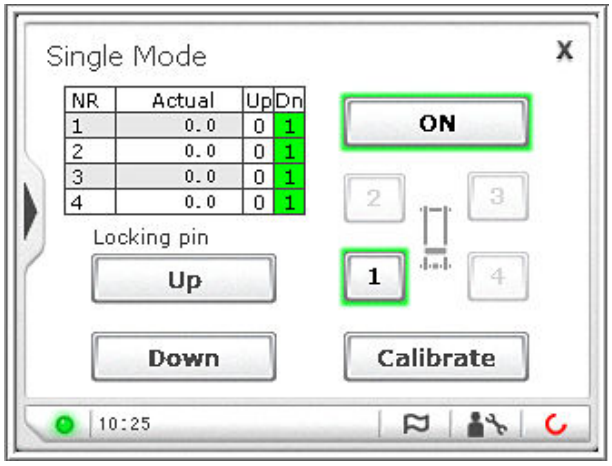

The **Single Mode** page has function buttons for operating an individual bogie in the "single mode" for maintenance troubleshooting.

To select the single mode, press the **OFF** button. The borders of the button turn green and the text on the button changes from "OFF" to "ON". Select an individual bogie end for operation by pressing the correct function button (the bogies numbered as 1...4). The button changes into the "selected" state and the other buttons are remain inactive.

In the single mode, you can also move the swivel locking pin of the bogie up or down (by pressing the **Up** or **Down** button).

In the single mode, you can turn the individual bogie by using joystick in the controller (make sure first that the locking pin is up). The "Actual" value in the table shows the wheel pivoting in degrees.

Copyright © (2016) Konecranes. All rights reserved.

When the single mode is **ON**, it is possible to calibrate the position encoder of the selected bogie, for example, in case when the encoder has to be replaced with a new one. Before calibration, ensure that the wheel pair (bogie) is in the direct (long travel) position, and the locking pin is down.

Example: calibrating the position encoder

1. *Select the single mode **ON**.*
2. *Select the bogie number **4** by pressing the appropriate function button.*
3. *Press the **Calibrate** button, which resets the "Actual" value of the selected bogie as zero (0) degree.*

Skew page

MAIN MENU > SERVICE > SKEW

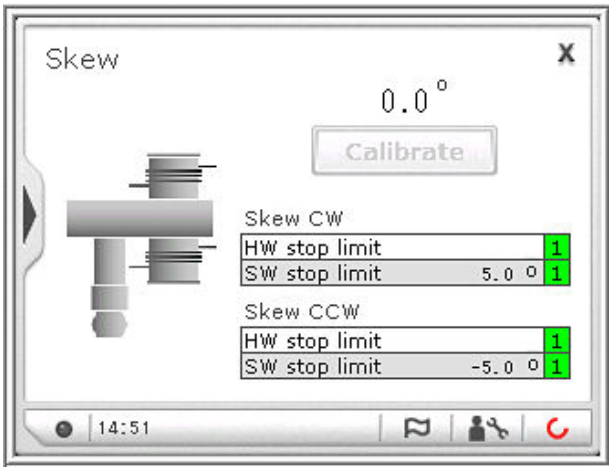

On the **Skew** page, you can calibrate the skew value with the **Calibrate** function button.

WARNING! MACHINE MALFUNCTION HAZARD

Resetting calibration values could cause crane malfunction and could lead to death, severe personal injury, or property damage.

Calibrate function button is normally only needed during commissioning. Do not press this button in the normal operations.

When calibration is required, adjust the skew machinery first manually to its center position by using the Skew CCW/CW push-buttons on the controller. To calibrate the actual angle value that is shown on the screen, press the **Calibrate** function button on the **Skew** page.

Table 21. Status flags of the skew machinery mechanical and software stop limits

Parameter	Description
Skew CW: HW stop limit	red = limit tripped (active); green = limit not tripped
Skew CW: SW stop limit	white = limit tripped (active); green = limit not tripped
Skew CCW: HW stop limit	red = limit tripped (active); green = limit not tripped
Skew CCW: SW stop limit	white = limit tripped (active); green = limit not tripped

Bypass page

MAIN MENU > SERVICE > BYPASS

Copyright © (2016) Konecranes. All rights reserved.

On the **Bypass** page, you can bypass the following functions:

- Bogie and encoder functions
- Traveling machinery brake supervision
- Overload stop limit
- Feeler pin limit switches
- Load cell function
- Ladder limits
- Gate limits

WARNING! MOVING MACHINERY HAZARD

Bypassing crane safety limits or functions could cause unexpected crane movements, which could lead to death or severe personal injury, or material damage.

Do not select the bypass operations unless you are authorized to perform maintenance operations and have a valid reason to bypass a certain limit or a function.

Bypass - Bogie

MAIN > MENU > SERVICE > BYPASS > BYPASS - BOGIE

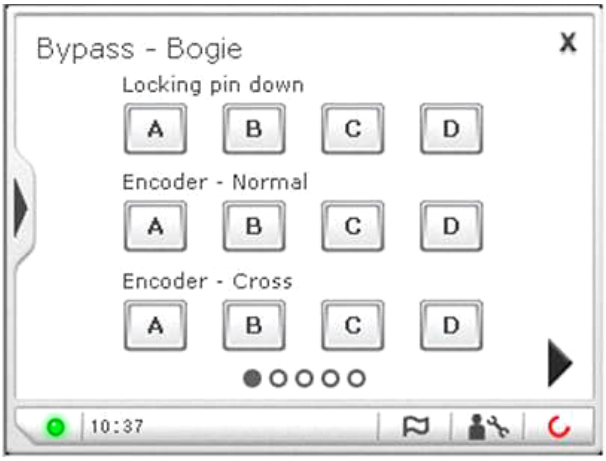

On the **Bypass - Bogie** page, you can bypass the "Locking Pin Down" information of the bogie. This is required when a limit switch is broken and does not allow gantry traveling motion. Ensure first that the locking pins are down correctly.

You can also bypass a faulty encoder of a bogie to allow gantry driving in the long (normal) or cross travel mode. Before you bypass the encoder, ensure that the bogie is in the correct alignment.

Copyright © (2016) Konecranes. All rights reserved.

Bypass - Brake

MAIN > MENU > SERVICE > BYPASS > BYPASS - BRAKE

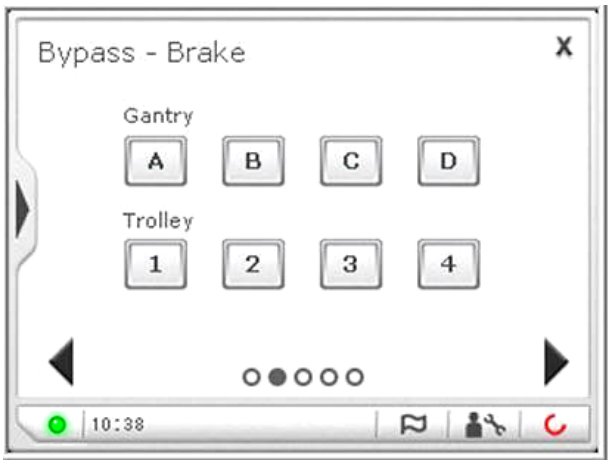

On the **Bypass - Brake** page, you can bypass the brake supervision in the gantry and trolley traveling motions for maintenance purposes.

Bypass

MAIN > MENU > SERVICE > BYPASS > BYPASS

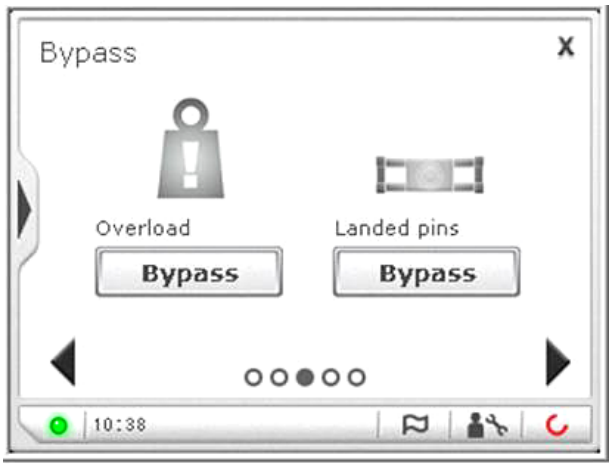

On the **Bypass** page, you can increase the overload protection triggering limit of the PLC system from 110% to 135% of the rated capacity.

On the **Bypass** page, you can also bypass the "Landed pins" information. This is required, for example, when a limit switch of a feeler pin is broken, and does not allow twistlock movements. Before you bypass feeler pins, ensure first that the spreader is correctly landed.

Copyright © (2016) Konecranes. All rights reserved.

Bypass - Load Sensor

MAIN > MENU > SERVICE > BYPASS > BYPASS - LOAD SENSOR

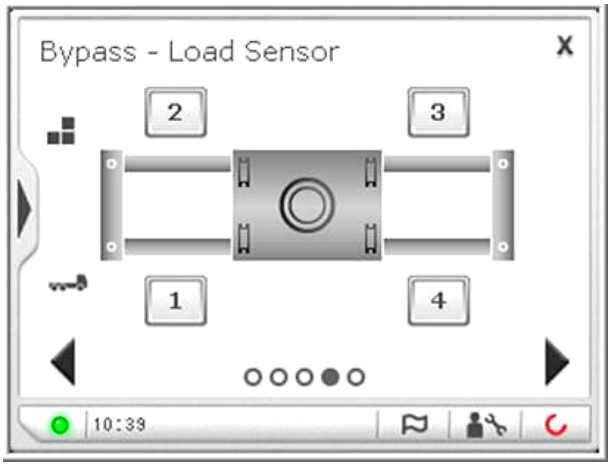

On the **Bypass - Load Sensor** page, you can bypass a faulty load cell that is mounted between a hoist wire rope and a skew rope. When the bypass is active, the value of the bypassed load cell is calculated by multiplying the value of the adjacent load cell with factor 1.2.

NOTE ***You can only bypass one of the two load cells in the same end at a time.***

Bypass - Ladder Limit

MAIN > MENU > SERVICE > BYPASS > BYPASS - LADDER LIMIT

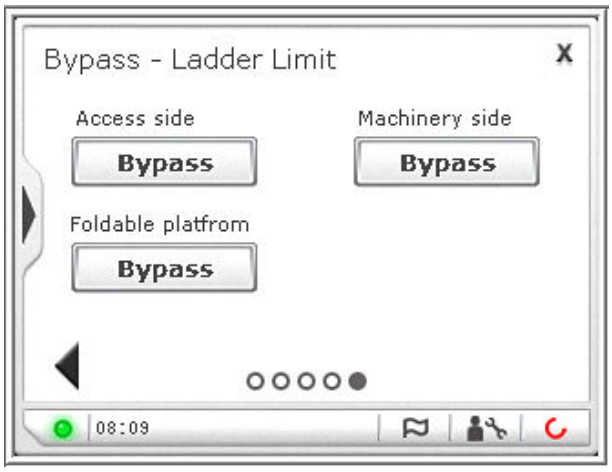

On the **Bypass - Ladder Limit** page, you can bypass a ladder limit that is activated in the gantry traveling, when a portable ladder is not placed in its hanger, or the foldable service platform is not correctly stowed. This bypass function is needed, for example, when a ladder is broken and cannot be moved, or when a ladder limit switch itself is not functioning properly.

Copyright © (2016) Konecranes. All rights reserved.

Bypass - Gate Limits

MAIN > MENU > SERVICE > BYPASS > BYPASS - GATE LIMITS

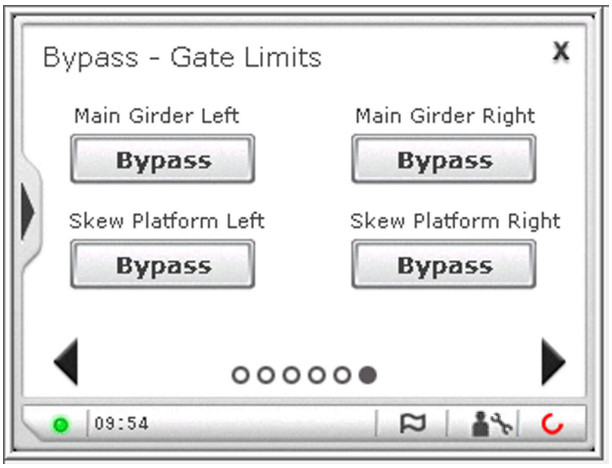

On the **Bypass - Gate Limits** page, you can bypass an individual access gate limit switch. Use this bypass function only when a gate limit switch itself is not functioning properly. Replace immediately any gate limit switch that is not working correctly.

Copyright © (2016) Konecranes. All rights reserved.

Logging out of the operator panel

If you have logged in to the operator panel with a service level access (a passcode required), remember to log out of the system before leaving the operator's cabin. The system also logs out an inactive service level user automatically after 10 minutes.

To log out, press the service level icon on the right bottom corner of any page on the operator panel:

The icon changes to the operator level icon indicating that you have logged out from the service level:

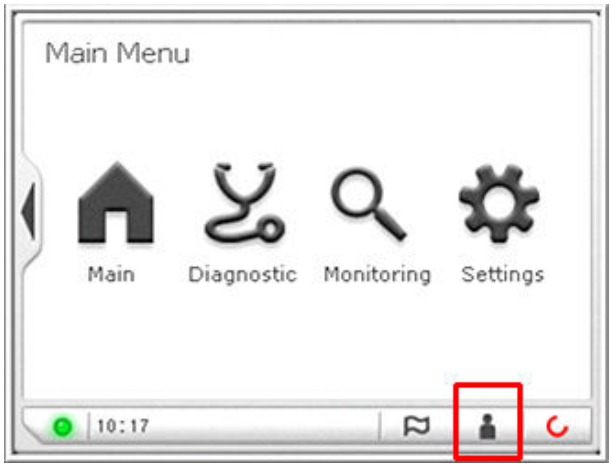

3.13.5 Web CMS

Web CMS is a web application for displaying diagnostics, operation, and usage data of the crane. The software reads the data from the PLC system of the crane.

Web CMS is a lightweight alternative for the full Konecranes Crane Management System (CMS) solution. The Web CMS server hardware is located in the electrical equipment cubicle of the crane. The web application can be accessed locally via the crane systems, or remotely via a wireless connection.

Web CMS Main Screen shows the most relevant online information on the crane. In addition, the **Diagnostics** section shows active alarms and alarm history, and the **Monitor** section provides other detailed information like motor temperature or steering angles.

For more information, see the *Owner's Manual for Web CMS*.

Copyright © (2016) Konecranes. All rights reserved.

3.14 Other cabin components

In addition to the main control devices, the operator's cabin equipment includes, for example:
- Windshield wipers
- Alarm horn
- Air conditioning and heating
- Lights

3.14.1 Wipers and washers

BOXHUNTER crane is equipped with wipers and washers on the outside of the cabin windows. Wipers and washers ensure that the operator has a clear view of the container handling, especially when it is raining or if condensation forming on the outside surface of the cabin windows.

Operator's cabin includes motor-driven windshield wipers and washers which you can turn on with two selector switches on the dashboard (one switch for the front and roof windows, and the other switch for the rear window), see also chapter *Dashboard*.

Fill in clean water regularly in the reservoirs of the washers. To improve its cleaning properties, add a small quantity of screen wash detergent to the water (as used for road vehicles).

NOTE ***Make sure there is always water in the reservoirs, otherwise the washers do not work.***

3.14.2 Alarm horn

BOXHUNTER crane is equipped with a loud horn that you can use to give audible warning to the personnel on the site, or to draw the attention of the truck drivers. You can sound the alarm horn with the push-button located on the controller:

3.14.3 Air conditioning in operator's cabin

BOXHUNTER crane is equipped with an air conditioning system for the operator's cabin. The air conditioning system ensures the comfortable working environment in the cabin, independent of the weather conditions outside.

All the features of the air conditioning system are adjusted from the left side of the dashboard.

Copyright © (2016) Konecranes. All rights reserved.

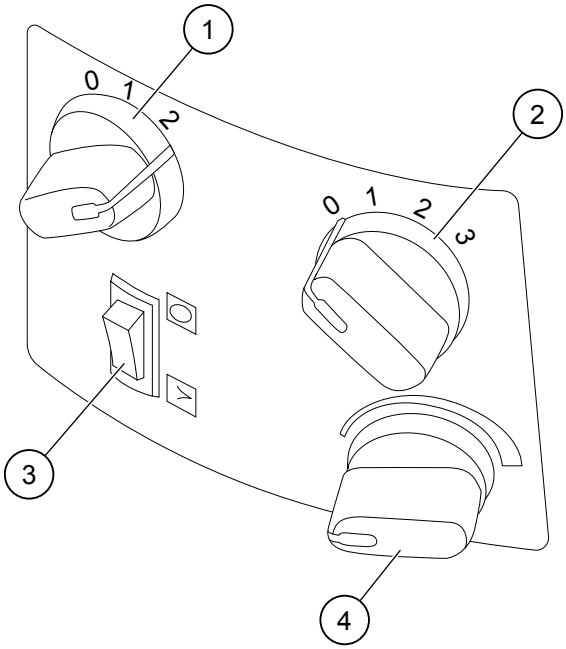

Figure 37. Air conditioning in the operator's cabin

1. *Heating selector switch (0-1-2)*
2. *Cooling fan selector switch (0-1-2-3)*
3. *Ventilation rocker switch (air recirculation / fresh air intake)*
4. *Cooling switch (stepless adjustment)*

Copyright © (2016) Konecranes. All rights reserved.

4 MAINTENANCE INSTRUCTIONS

4.1 About maintenance

To keep the crane in good working order, carry out adequate preventive maintenance at regular intervals. This is necessary to guarantee a continued high level of reliability and availability. It is also important for ensuring the safety of all persons working near the crane.

The requirements for all routine maintenance activities on the crane are described in this manual. Where the maintenance tasks are carried out by a specialist subcontractor, this manual can be used to define the extent of the work.

The preventive maintenance tasks are divided to:

- Routine inspections and maintenance: mechanical and electrical
- Structural inspections and maintenance
- Lubrication

4.1.1 Routine inspections

Routine inspections are described in the maintenance instructions for each main component.

In addition to the visual checks, inspect the components on a routine basis. The person carrying out each of these inspections must be suitably qualified and experienced.

It is recommended that the person carrying out the inspections records the checks that have been carried out.

Inspection procedures are based on the best practices and are chosen to give a high general standard of safety and reliability for the crane. They include the tests and calibrations of safety protection systems. There may be local statutory requirements, which apply to the inspections, tests, or calibrations of the complete crane or just to certain components. If needed, supplement the routine maintenance procedures to meet the requirements.

NOTE ***Absence of statutory requirements does not entitle to reduction of the routine maintenance requirements.***

4.1.2 Designed working period (DWP)

In the case of significant permanent changes to product usage, authorized service personnel must revise the duty class and design working period (DWP) as necessary. Revisions to the duty class and DWP may require changes to hardware or servicing frequency.

For more information, see *Hoist duty class* in this manual.

4.1.3 General overhaul

For more information on the crane's general overhaul requirements, see the long-term maintenance details listed in this document, or contact Konecranes.

4.2 Safety during maintenance

⚠ WARNING

IGNORING INSTRUCTIONS HAZARD

Failure to follow the given instructions could cause death or serious injury.

Read the general safety instructions here and at the beginning of this manual. Special safety information is provided in the component-specific instructions.

Copyright © (2016) Konecranes. All rights reserved.

Safety information provided here is of a general nature and the maintenance tasks include more detailed safety information. Observing all safety information helps preventing hazards to the life and health of persons as well as damage to the crane and the environment. Always observe local safety rules and regulations.

- Wear approved PPE that is suited to the maintenance task. Do not wear loose clothing, a neck tie, or open shoes. Tie back long hair. For more information, see *Personal protective equipment*.
- Follow the fall protection procedures.
- Do not store any flammable materials (for instance, oil drums) on the crane. Follow the appropriate fire prevention and protection measures.
- Beware of hot components. Some components, such as motors, can become hot during use. Check that components are cool before working on them.
- Voltages can be present in some parts of the crane after switching off the main diesel engine. This applies especially when the crane is connected to an auxiliary diesel alternator or to a site power supply. Take particular care with heating and lighting components, including anti-condensation heaters.
- Maintain a safety distance to all hazardous zones, especially when testing live components and with protective covers removed.
- Dismantling a component against these instructions or beyond the extent that is specified in these instructions could cause machine malfunction. Any dismantling of the assemblies over and beyond the specified limits is forbidden. Refrain from any actions that could affect the safety or integrity of the component.
- If you detect any critical defects during maintenance, make sure that the crane is not operated until the defect has been rectified.

4.3 Maintenance preparations

Before starting maintenance work:

- Familiarize yourself with the equipment and its user instructions.
- Find out the location of the main isolation switch and the emergency stop buttons.
- Use barriers to mark out a sufficiently sized working area and prevent unauthorized persons from accidentally entering this zone.
- Make sure that there are no persons below the crane (at ground level), while maintenance work is being carried out above (on the trolley).
- Before starting the crane, carry out the prestart checks described in the *Operator's Manual*. During these checks, identify any of the component that has been mechanically damaged, or fixings that are loose, or detached.
- Prevent the relevant motions and drives from operating by isolating their electrical supplies.
- If possible, open and lock the isolator in the feed from the diesel alternator.
- Lock out and tag out the product power source, in accordance with local regulations. For more information, see *Lockout-tagout-tryout procedure*.
- To protect sensitive components against moisture and condensed water, connect the crane to the shore power and keep the anti-condensation heating and air conditioning on whenever the diesel engine is stopped.

For detailed information on maintenance preparations, see the component-specific instructions.

NOTE ***The lengths, weights, torques, forces, temperatures, and speeds are presented in both metric (SI) and imperial / US units. If there are disparities between these units, the metric values are the ruling ones.***

Copyright © (2016) Konecranes. All rights reserved.

4.3.1 Tool requirements

The following table includes common standard tools that are required in the routine and special maintenance procedures:

Table 22. Required tools

Tool	Qty.	Tool	Qty.
Side cutter	1	Phillips screwdriver PH4/200	1
Heavy duty "bolt" cutter	1	Screwdriver 4x100 mm	1
Set of combination pliers	2	Screwdriver 6.5x150 mm	1
Set of long-nose pliers	2	Screw driver 8x200 mm	1
Set of internal circlip pliers	3	Ball head hammer 0.9 kg	1
Set of external circlip pliers	3	Club head hammer 2 kg	1
Wire crimping tool	1	Hard steel chisel 125x12 mm	1
Stillson pipe wrench (450 mm)	1	Hard steel chisel 175x16 mm	1
Water pump pliers set	2	Punch set	1
Allen key set (1.5...10 mm)	1 set	Flat file	1
Allen key set (10...64 mm)	1 set	Round file	1
Ring spanners (6x7...30x32 mm)	1 set	Triangular file	1
Open spanners (6x7...30x32 mm)	1 set	Needle file set	1 set
Combination spanners (6...36 mm)	1 set	Hacksaw	1
Ratchet wrench (17x19 mm)	1	Small hacksaw	1
½" drive ratchet wrench	1	Hard metal scraper	1
½" drive extension (255 mm)	1	Digital micrometer (0..25 mm)	1
½" socket set (10..36 mm)	1 set	Vernier calliper (150 mm)	1
½" torque wrench (40..210 N-m)	1	Steel tape measure (3 m)	1
¾" drive ratchet wrench	1	Digital multimeter	1
¾" drive extension (200 mm)	1	Voltage testing probe	1
¾" socket head (14x18 mm)	1	Clamp-on ammeter	1
¾" socket set (27,30,32,36 mm)	1 set	500V insulation tester	1
¾" torque wrench (80..400 N-m)	1	Battery-powered hand lamp	1
Torque wrench (300..940 N-m)	1	Angle grinder	1
Torque multiplier	1	Electric drill	1
Impact drive wrench ½"	1	Hard metal drill bits (1..15 mm)	1 set

Copyright © (2016) Konecranes. All rights reserved.

Tool	Qty.	Tool	Qty.
Impact socket set 10-24 mm	1	Hard metal drill bit (25 mm)	1
Phillips screwdriver PH2/100	1	Hosepipe (16 mm x 10 m)	1
Phillips screwdriver PH3/150	1	Vacuum cleaner (for wet dirt)	1

4.4 Maintenance schedule

4.4.1 Routine inspection schedule

Do the following inspections as per the mentioned schedule for hours run, or month, or year, whichever is earlier.

For detailed information on the routine inspection intervals, see the component-specific maintenance schedules and instructions.

Table 23. Routine inspection intervals

Interval	Description
Every 50 h / 1 week *	Carry out a general visual inspection of all the components (for example, the wheels) from the ground level.
250 h / 5 weeks *	While each item of machinery is running, carry out the visual inspection of the components and an aural check to listen for internal defects. Inspections on top of the crane are not needed more often than every five weeks.
500 h / 10 weeks *	Inspect the components that can wear during normal operation. Check the air filters. Clean and replace the clogged ones.
1000 h / 20 weeks *	Inspect the components which are dismantled as part of the procedure.
2000 h / 40 weeks *	[to be added]
4000 h / 1 year *	[to be added]
Calendar based	To meet local statutory requirements, inspect, or test the certain items at prescribed calendar-based time intervals (for example: wire ropes, fire extinguishers, over-speed protection, overload protection).

* Whichever comes first.

NOTE ***Hour intervals may vary depending on the type and nature of the operation.***

If the crane is not in operation for a long period (>1 month), all the general visual inspections should be carried out before use.

Copyright © (2016) Konecranes. All rights reserved.

4.4.2 Structural inspection schedule

Structural inspection require different tests on certain welds or components at varying intervals. Therefore, the schedule for the structural inspections deviates from the format of the routine inspections schedule.

Table 24. Structural inspection intervals

Inspection interval	Inspection
Yearly (1	Do the visual inspection of all welds, bolted joints, and surface coatings. This includes the welds that are subject to the non-destructive testing (NDT) on certain years.
Every 5, 15, 25 years and then every 5 years (1, 2, 3	Do the first full-scale NDT of welds. The inspection schedule lists the welds that are subject to this requirement. Do the visual inspection of all other welds, box type beams, and surface coatings. Tighten the torque of the bolted joints.

(1 If the visual inspections give reason to suspect excessive crack growth, extra NDT inspections must be carried out. The extra test requirements are restricted to the specific welds that are showing crack growth.

(2 After 25 years since the start-up, the NDT results for some weld details may show that there are a significant number of new cracks since the previous NDT inspection. This occurs if the stress levels in these details are close to the maximum allowable. For these welds, repeat the NDT every year, for the remaining life of the crane.

(3 For the bolted joint inspection schedule, see *Inspection and tightening of bolted joints*.

4.4.3 Lubrication schedule

The lubrication schedule for routine maintenance is based on activities at several different time intervals. The lubrication intervals are based on a combination of the running hours by the diesel engine and fixed calendar intervals.

This means that for a crane with a high utilization factor, the lubrication intervals are primarily determined by the running hours. For a low utilization factor (<35%), the lubrication intervals are determined primarily by the fixed calendar intervals.

Table 25. Lubrication schedule

Lubrication interval	Task
250 h / 5 weeks*	Check and replenish the fluid levels in the gearboxes and hydraulic unit reservoirs, if necessary.
500 h / 10 weeks*	Carry out general routine grease-gun and oil-can lubrication. This ensures that all components of the crane are kept in good working order.
4000 h / 1 year*	Carry out the major lubrication at this interval, when the lubricating oils and most of the greases are changed.
Yearly after the first year	Dismantle the components partially to carry out the grease lubrication.
Various intervals	Detailed information on diesel alternator, cable reel, spreader, or air conditioning lubrication is not included in this manual. For instructions, see the manufacturers' documentation.

* Whichever comes first.

Copyright © (2016) Konecranes. All rights reserved.

4.5 Structural inspections

This section includes instructions for visual inspections of all structural welds, the tightness checks of bolted and pinned joints, and the inspection of surface coatings.

⚠ WARNING

MOVING MACHINERY HAZARD

Moving or rotating machinery may cause accidents during the inspection operations, which could lead to death or severe injury.

Before starting the structural inspection, prevent all of the crane drive motors from operating by isolating the power supply to the drives. Stop also the main diesel alternator.

4.5.1 Inspection for fatigue crack growth

Welded steel structures always contain small undetectable cracks, usually at welded joints. When these joints are subject to fluctuating stresses beyond a very small value, the cracks grow. This is called fatigue crack growth.

The allowable stress levels that are used in the design of the structure take this phenomenon into account. The allowable stress levels are determined by analyzing laboratory tests. Typical details are subjected to cycles of stress fluctuation. The allowable stress level is determined by applying a factor of safety to the lower limit of the test data scatter band. In a few laboratory tests, failure occurs at a stress level below the allowable.

There are thousands of welded details in the crane structure, which are subjected to repeated stress fluctuation. It is probable that fatigue crack growth takes place in some details, before the end of the full service life. This is a consequence of the statistical nature of the phenomenon.

There are no recognized crane specifications in use in the world today that have stresses at such a low level that fatigue crack growth will not be expected to occur on a random basis. Eventually, the fatigue cracks become large enough to be detectable with non-destructive testing methods, that is, dye penetrant, magnetic particle, or ultrasonic.

The very ductile steel that is used by Konecranes ensures that cracks are detectable by visual inspection, before fracture is likely to occur. In many cases, even if fracture occurs, the remaining elements of the structure prevent serious damage, if the crane is immediately taken out of service and repaired.

In order to avoid serious failure in the crane structure, periodic inspection is required to detect fatigue cracks that have grown to a significant size. When a crack is found, a repair is necessary.

Restoring the structure to its original condition is always acceptable. Sometimes, this is not practical, and a change in geometry by means of cutting and grinding is more economic.

Sometimes, fatigue cracks are found with a frequency greater than would be expected, considering the stress levels used in the design. This may be caused by over-stress in the crane during its operation. If such cracking is found, a review of the operation must be made, to see if over-stress is occurring. Remedial measures shall be developed to avoid it in future.

Cracking may also be caused by differences in geometry between the actual detail and the tested detail. In this case, it may be more economical to modify the geometry to allow a smoother stress flow in the joints.

4.5.2 Inspection methods

In general, non-destructive testing (NDT) is sensitive to the external conditions and to the characteristics of the structure. Competent person must perform inspection using the recognized methods.

Copyright © (2016) Konecranes. All rights reserved.

If there is any suspicion of a crack, the weld must be examined thoroughly, so that the extent of the defect can be fully assessed.

Visual test (VT)

Before inspecting a weld, remove any dirt or grease from its surface by wiping with a rag (using cleaning solvent if necessary).

Use a bright light (or powerful torch) to illuminate the surface evenly (without shadows). Use a good magnifying glass to aid the inspection.

Inspect the weld surface for cracked paint and rust showing through the paint. Cracked paint or rust is indicative of a crack in the weld below the paint (that is, the weld allows sufficient flexing for the paint to crack).

If a crack is detected by visual testing, use magnetic particle testing or ultrasonic testing in addition to properly verify the extent of the damage.

Magnetic particle inspection (MT)

Do the magnetic particle inspection in accordance with a recognized procedure, for example, ASTM E 709.

The test surface must be free from loose rust scale and moisture. An even paint layer can be left in place over the inspected surface, providing that the thickness does not exceed 100 µm (0.0039 in).

NOTE ***If there is any doubt that the paint coating is affecting the test results, remove it from the inspection area.***

Heavy grinding, brushing, or blasting can affect the results of this testing method in some instances.

You can apply a magnetic field to the test material with one of the following methods:
- Permanent magnet
- Yoke which includes an electro-magnetic device

Ultrasonic test (UT)

Do the ultrasonic testing in accordance with approved standard methods.

Before testing, prepare the surface to the required flatness and smoothness conditions.

Do the scanning using suitable direct or angled probes.

The inspection results must provide detailed information about any defects within the volume of the weld, in addition to any surface cracks.

4.5.3 Inspection and tightening of bolted joints

During the operation of the crane, bolted joints are subjected to varying loads. To minimize the differences in loads on these bolts, they must all remain at a high and even tension. In operation, these bolts may become loose through settling of the joint surfaces.

The purpose of the periodic bolt tightness check is to make sure that all bolts are carrying an equal share of the loads, and to replace any elongated or suspect bolts, before fatigue fracture occurs.

The maintenance work must be carried out while the crane is out of operation and the spreader is not carrying any container.

Copyright © (2016) Konecranes. All rights reserved.

For detailed instructions on tightening and maintaining the bolted joints, see appendices *Tightening and maintenance of bolted joints* (HU3.12.0170en) and *Calibration test of torque wrench* (HU3.12.0160en).

Visual inspection

At each yearly interval when the welded connections are subjected to visual inspection, also visually inspect all bolted joints in the structure.

For each joint, the visual inspection should include the following checks:

- Check that the bolts and / or nuts are tight
- Check that any locking devices that prevent the bolts or nuts from coming loose are fitted correctly
- Check that there is no evidence of relative movement between the joint face

If a bolted joint fails any of these checks, tighten all bolts and nuts in the joint to the required level using the correct procedure, and then fit the locking devices.

If there is any doubt that a bolt is seized or thread-bound and not applying the force to the joint, replace the bolt.

Bolt torque tightening

At the intervals when the welded connections are subjected to NDT inspection, tighten all bolted joints in the structure to the required torque.

The tightening torque values can be converted to other common units using the conversion factors (1 N-m = 0.738 lb-ft = 0.102 kg-m).

Frequency of bolt inspections

For the main bolted joints, specific instructions of the inspection frequency may be given in the particular instructions of these joints. This concerns, for example, the slew bearing bolts and major structural joints, which are shown in *Structural inspection plan*.

Table 26. Inspection intervals for bolted joints in BOXHUNTER

Inspection action	Time of action (years after start-up)	
	Structural joints	**Slew bearing bolts**
Visual inspection	1 – 4 6 – 14 16 – 24 26 –>	Every year
Bolt tightening procedure	5 15 25, 30, 35	Every year
Replacement of bolts	When needed	7, 14, 21 or when needed

4.5.4 Reporting procedure

NOTE ***Report every detected crack or indication of an internal defect! A crack or defect must always be repaired.***

Copyright © (2016) Konecranes. All rights reserved.

The owner of the crane is responsible for keeping complete records of all inspections. Where defects are found, the owner must ensure that suitable repairs are made. The complete history of all defects, repairs, and subsequent re-inspections must be maintained for the full operational life of the crane.

The manufacturer (Konecranes) shall receive a copy of all reports and test results of any structural inspection for comparison with other similar structures throughout the world. In the case of a significant structural defect, a prompt notification is important for the safety of others.

In particular, these reports must include photographs of the defective areas, or sketches showing where defects are evident from test results. Each defect report shall state the following:

- Crane number: manufacturer's serial number
- Exact location of the defective weld:
  - Component name, including manufacturer's mechanical drawing number and the part reference
  - Where there are several identical components, identification of the component (for example, gantry corner A, B, C, or D)
  - If needed, a marked-up copy of the appropriate mechanical drawing for locating the defective weld
- Size and number of defects in the weld: how long and how many?
- Type and extent of defect:
  - In the toe of the weld?
  - Propagating into the base metal?
  - Any other notes?
- Method of testing

4.5.5 Inspection for corrosion

External corrosion of steel structures

All steel structures are painted externally to prevent surface corrosion. Every year, inspect the external surfaces visually to ensure that the paint coating is intact. In any areas where there is evidence of significant surface corrosion, check the steel thickness.

Internal corrosion of box-type beams

Even though the inspection hatches are tightly closed, some water may collect inside the large box-type beams. This is due to the condensation of the humidity in the air during daily ambient temperature cycles. The moisture may lead to the internal corrosion of the box section beams.

Inspect the inside of all such beams on a periodic basis, at the same interval as the NDT tests. Where there is evidence of significant corrosion, measure the thickness of the plate accurately.

When the inspection is completed, refit the access hatches using new seals.

Maximum allowable corrosion of steel structures

The maximum allowable reduction in plate thickness varies between 5% and 15% of the original thickness, mainly depending on the extent of the corroded area.

Any areas where the corrosion exceeds these levels must be repaired using an acceptable procedure.

4.5.6 Structural inspection plan

The following figure shows the structural inspection points of the BOXHUNTER crane.

Copyright © (2016) Konecranes. All rights reserved.

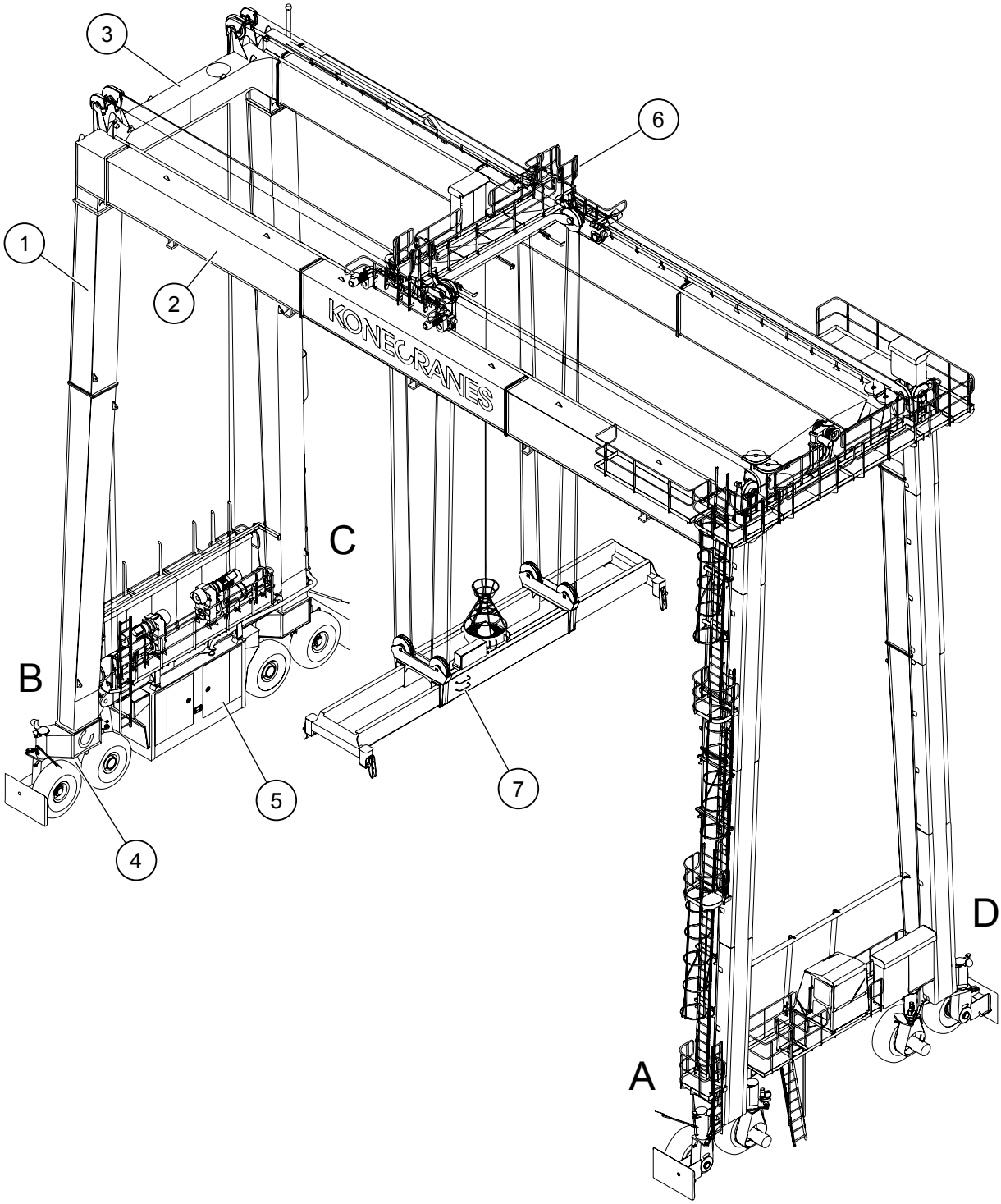

Figure 38. BOXHUNTER structural inspections

1. *Leg frames (including sill beam and struts)*
2. *Main girders*
3. *Top beams*
4. *Bogies*
5. *Diesel alternator set*
6. *Trolley*
7. *Spreader*

The structural inspection plan is in the form of drawings, showing the details of the welds and the bolted joints to be inspected.

Copyright © (2016) Konecranes. All rights reserved.

In many cases, the inspection plan location drawings may highlight only one or two instances of a component detail. However, the same detail may be repeated many times in the structure of the crane. The inspection plan applies to all instances of a similar component.

Similarly, the detail drawing may show only one end of a symmetrical component. The inspection plan applies to both ends of the component.

For more information on the structural inspections of the BOXHUNTER crane, see the appendix Structural inspection drawings (page 296).

For detailed instructions on tightening and maintaining the bolted joints, see appendices *Tightening and maintenance of bolted joints (HU3.12.0170en)*, *Calibration test of torque wrench (HU3.12.0160en)* and Bolt elongation data (page 297).

Inspecting the leg frames

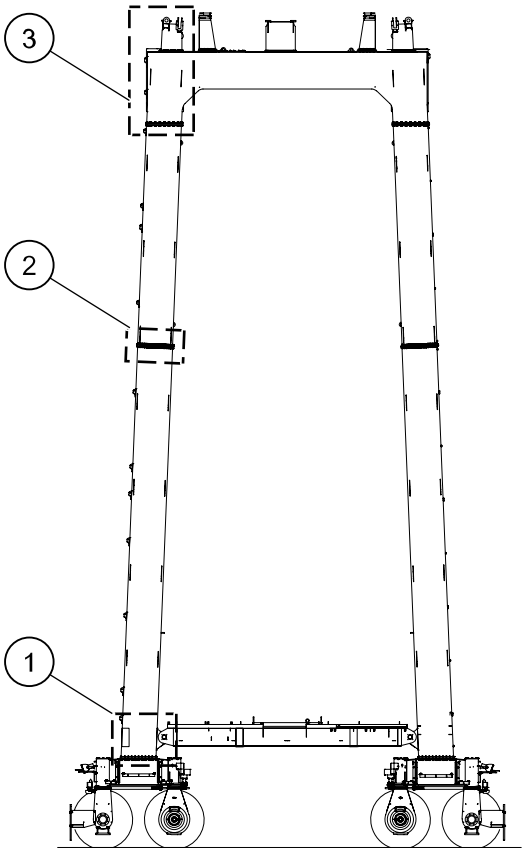

Figure 39. Inspection points for the leg frames

1. *Lower leg flange joints*
2. *Upper leg flange joints*
3. *Flange joints on top-beam level*

Lower leg flange joints

1. Inspect visually the flange joints around the lower legs.

Copyright © (2016) Konecranes. All rights reserved.

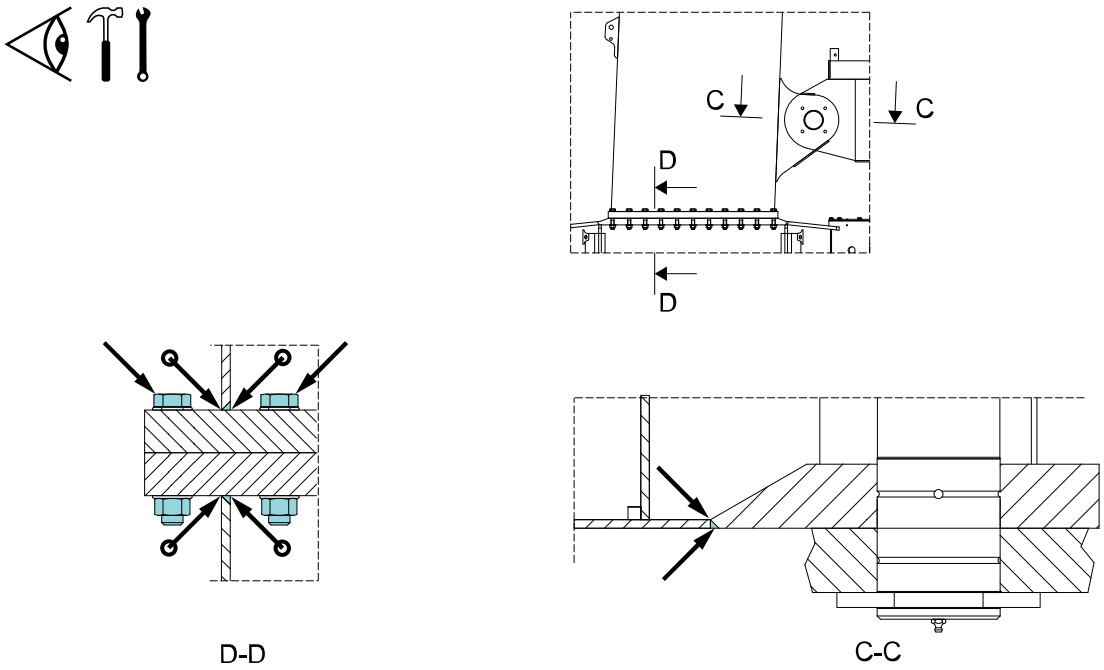

Figure 40. Inspection points for the lower legs

2. Check the tightness of flange joint bolts: M20, 64 per flange joint. If necessary, tighten the torque according to the *Bolt elongation data* in appendix.
3. Inspect visually the sill beam axle, axle holder, and tab washer.
4. Inspect the tightness of the axle holder bolts: M20, 2 per axle holder. If necessary, tighten the torque according to the *Bolt elongation data* in appendix.

Upper leg flange joints

5. Inspect visually the flange joints around the upper legs.

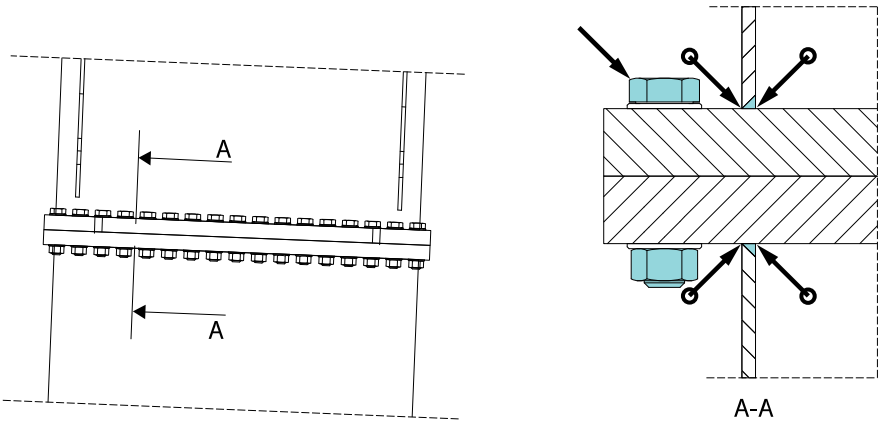

Figure 41. Inspection points for the upper legs

6. Check the tightness of flange joint bolts: M24, 60 per flange joint. If necessary, tighten the torque according to the *Bolt elongation data* in appendix.

Top-beam level flange joints

7. Inspect visually the flange joints on the top-beam level.

Copyright © (2016) Konecranes. All rights reserved.

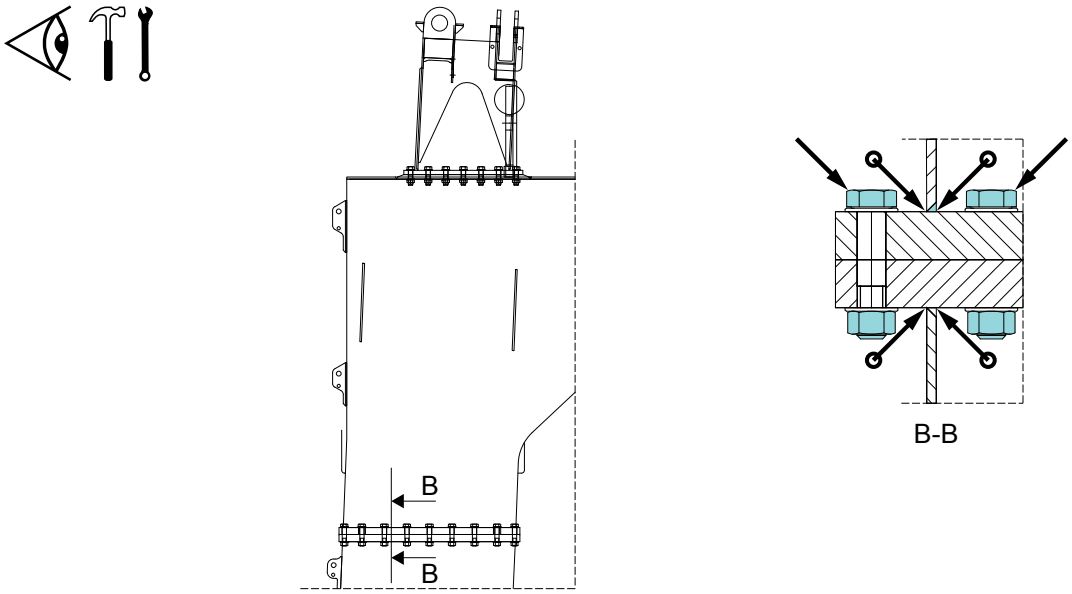

Figure 42. Inspection points for the top-beam level

8. Check the tightness of flange joint bolts: M24, 54 per flange joint. If necessary, tighten the torque according to the *Bolt elongation data* in appendix.

Inspecting the sill beam

Access-side sill beam

1. Inspect visually the frame welds on the access-side sill beam.

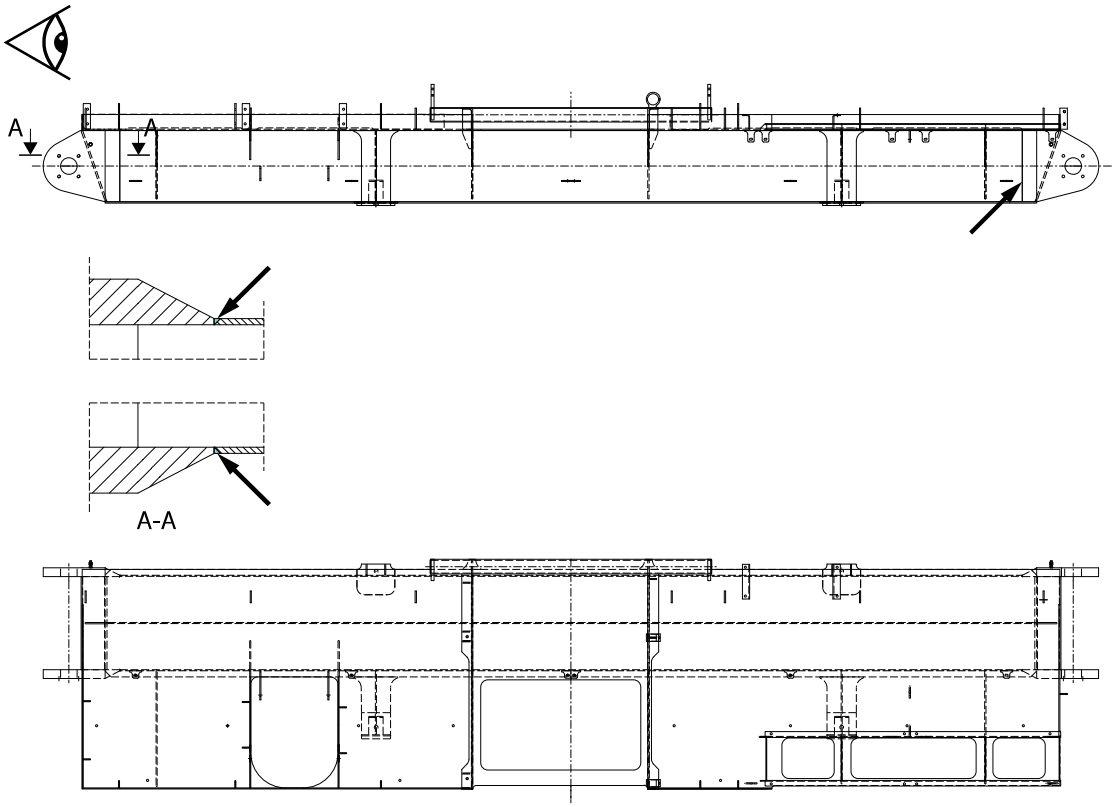

Figure 43. Inspection points for the access-side sill beam

Cabin support

2. Inspect visually the bolts (M16) and bushings on the cabin support.

Copyright © (2016) Konecranes. All rights reserved.

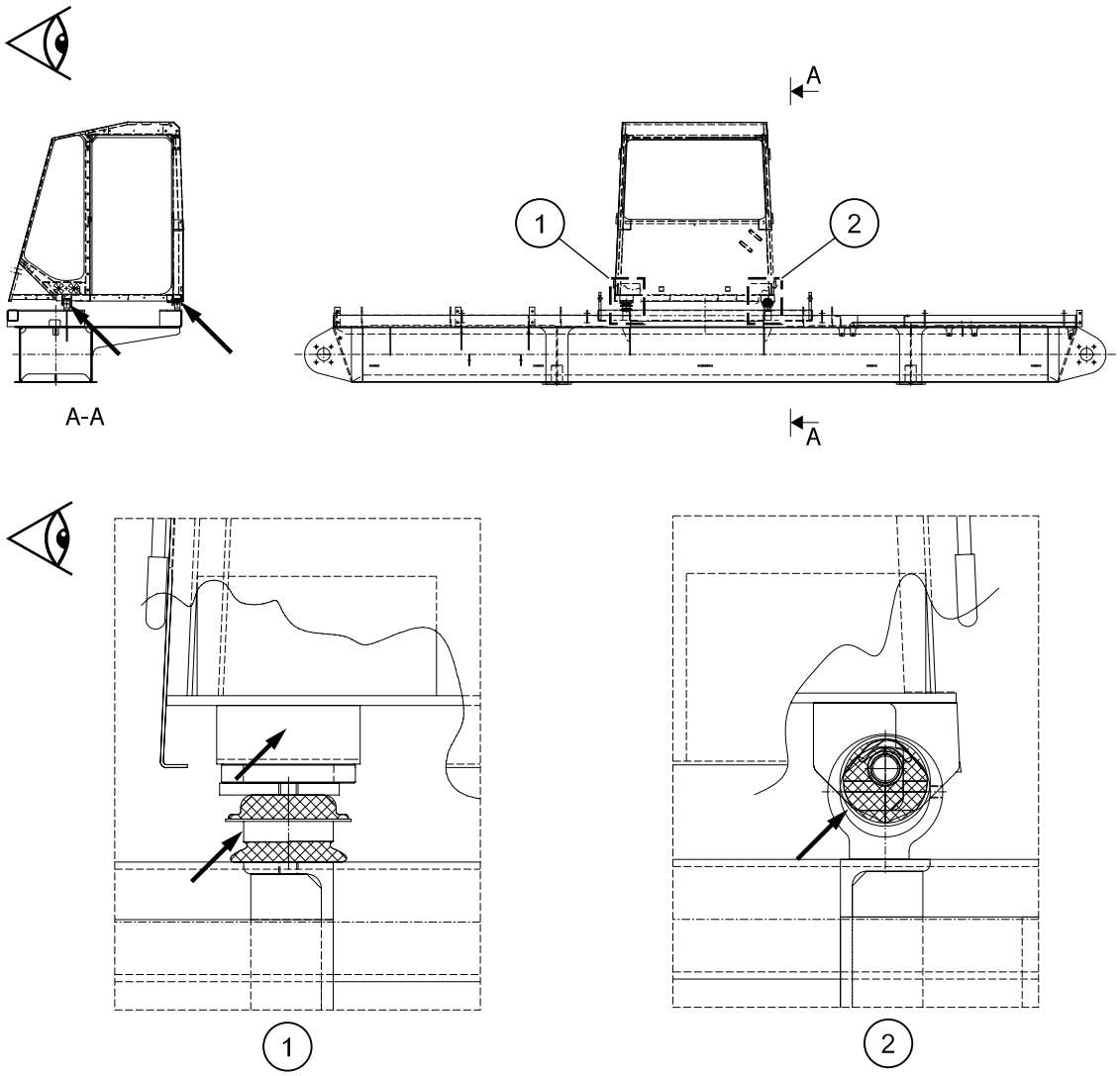

Figure 44. Inspection points for the cabin support

Machinery-side sill beam

3. Inspect visually the frame welds on the machinery-side sill beam and, if necessary, tighten the torque of bolts.

Copyright © (2016) Konecranes. All rights reserved.

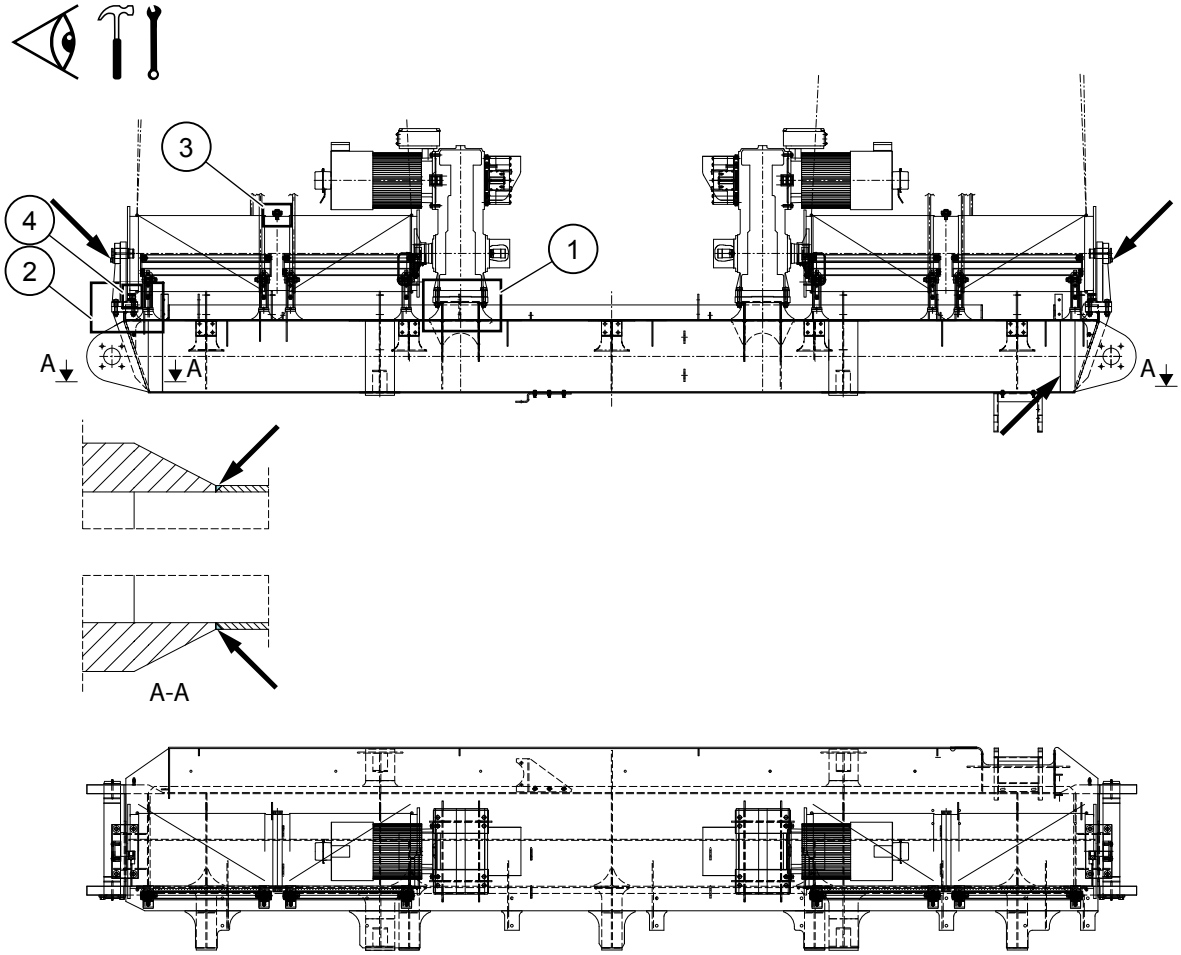

Figure 45. Inspection points for the machinery-side sill beam

3.1 Do the ultrasonic testing for the welded joints on the hoisting machinery mountings (1). Check the torque tightness of flange joints and, if necessary, tighten the torque: M24, 8 per flange, tightening torque: 660 Nm (487 lb-ft).

3.2 Do the ultrasonic testing for the welded joints hoisting machinery mountings (2). Check the torque tightness of flange joints and, if necessary, tighten the torque: M20, 4 per flange, tightening torque: 380 Nm (280 lb-ft).

UT

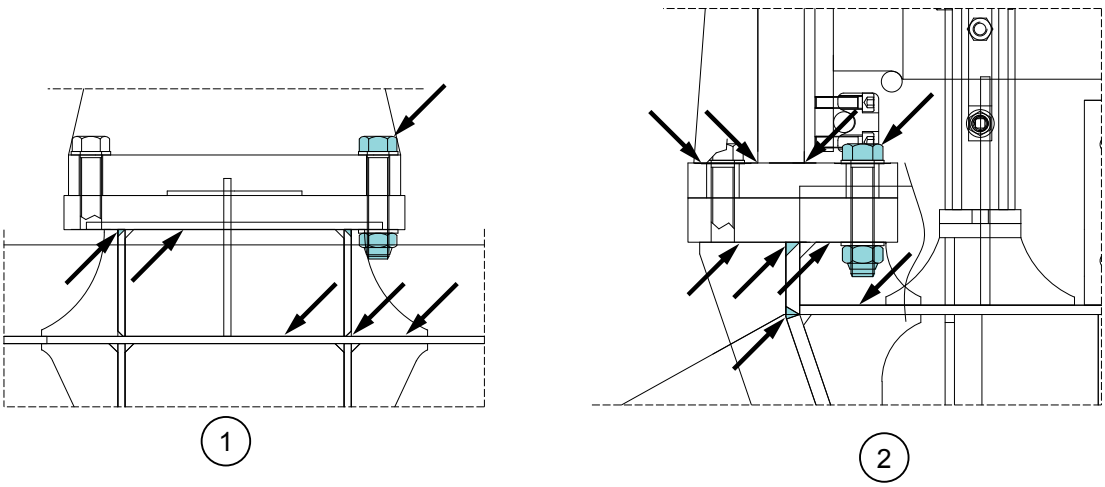

Copyright © (2016) Konecranes. All rights reserved.

3.3 Check the tightness of screws on the rope fasteners (3): M16, 1 per rope fastener, tightening torque: 195 Nm (144 lb-ft).

3.4 Check the tightness of screws on the rope clamps (4): M10, 2 per rope clamp, tightening torque: 43 Nm (32 lb-ft).

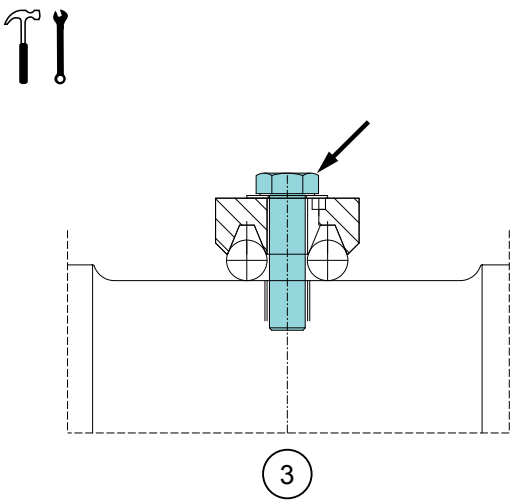

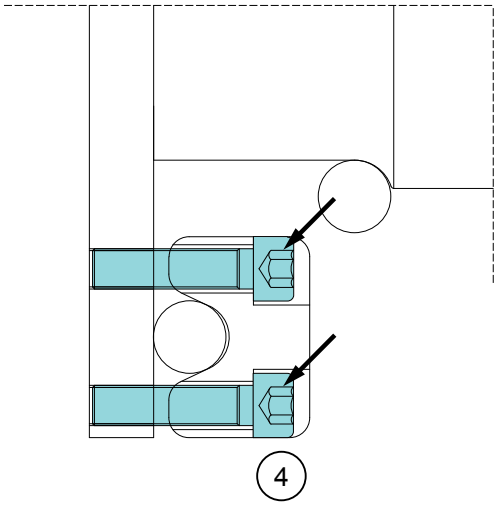

Power supply unit fasteners

4. Inspect visually the frame welds on both sides of the sill beam end.
5. Check the tightness of attachment bolts on the mountings (M24, 1 per flange joint). If necessary, tighten the torque: tightening torque = 660 Nm (487 lb-ft).

Copyright © (2016) Konecranes. All rights reserved.

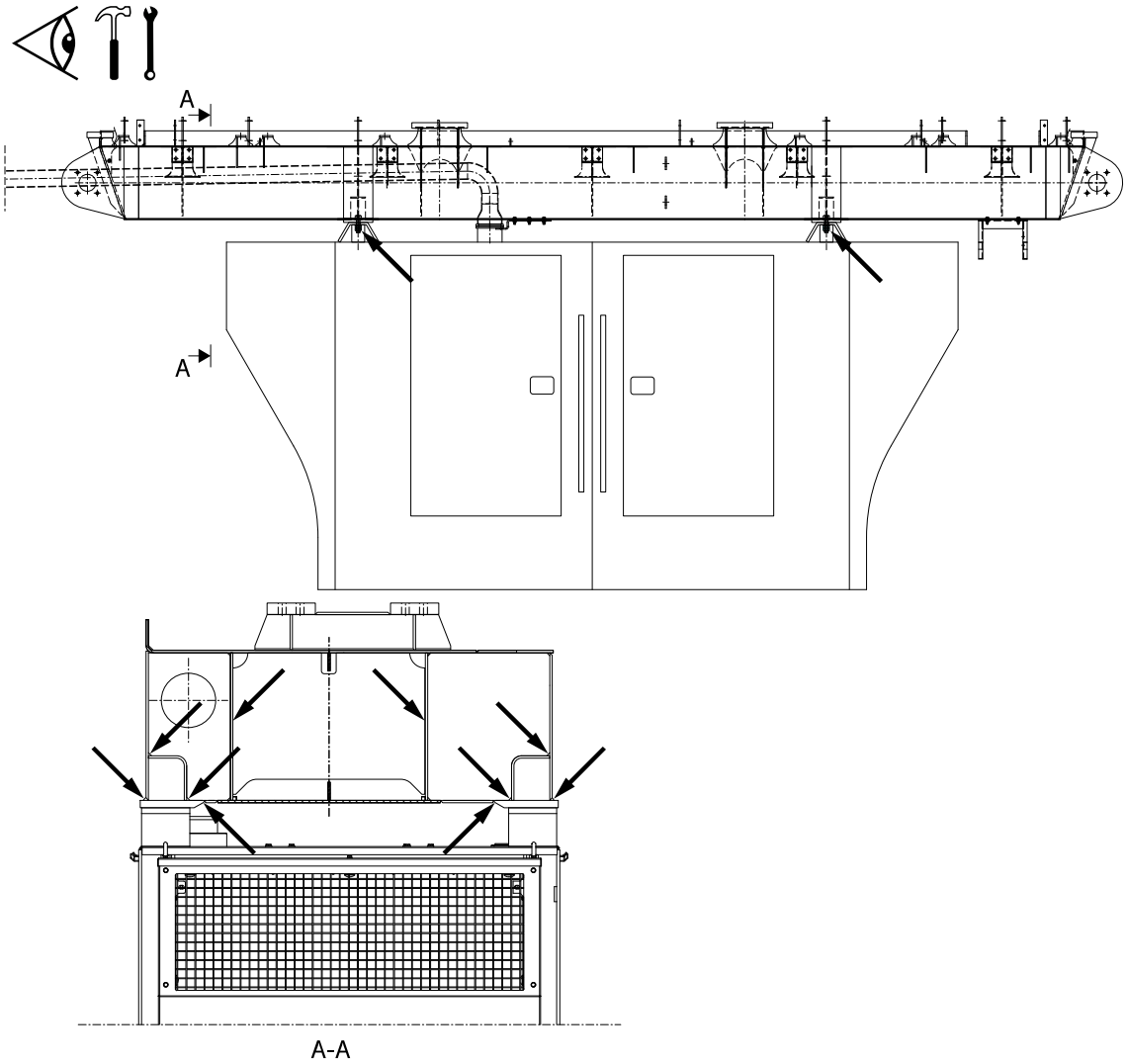

Figure 46. Inspection points for the power supply unit

Inspecting the main girders

1. On the main girder, inspect visually the welded joints between the web plates (A-A) and flanged plates (1, 2).

Copyright © (2016) Konecranes. All rights reserved.

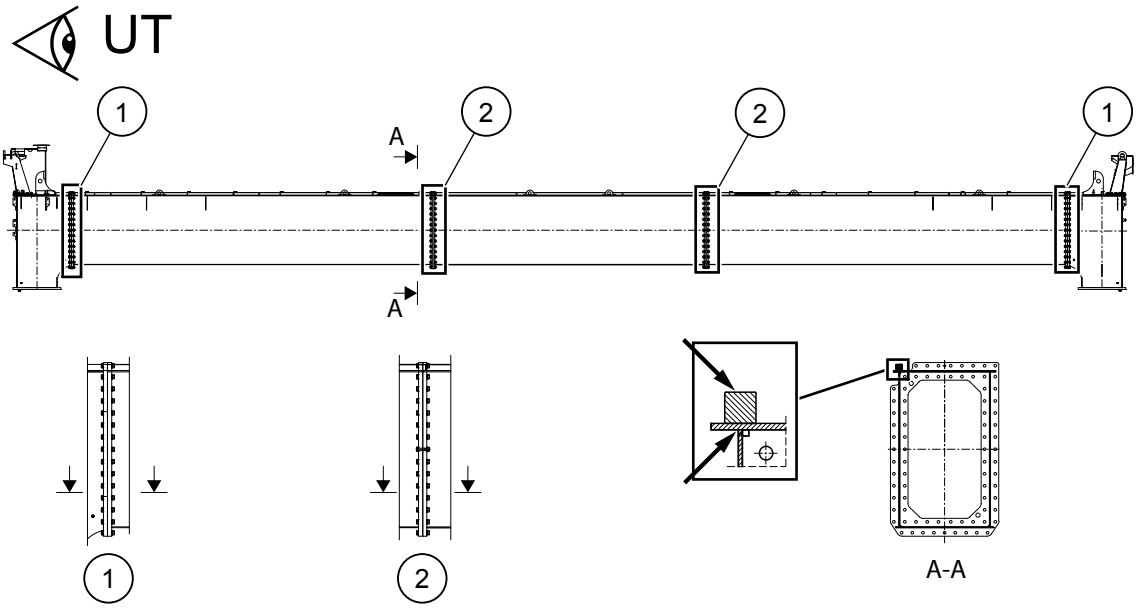

Figure 47. Inspection points for the main girder

2. Check the condition of the rail (close-up in A-A).
3. Inspect visually the flange joints at both ends of the main girder (1). Check the tightness of flange joints (M24, 80 per flange joint). If necessary, tighten the torque according to the *Bolt elongation data* in appendix.

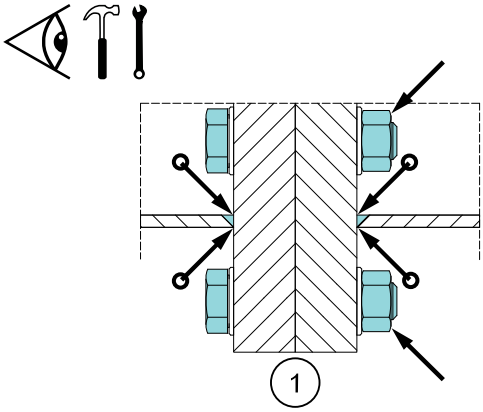

4. Do the ultrasonic testing for the flange joints on the middle of the main girder (2). Check the tightness of flange joints (M24, 80 per flange joint). If necessary, tighten the torque according to the *Bolt elongation data* in appendix.

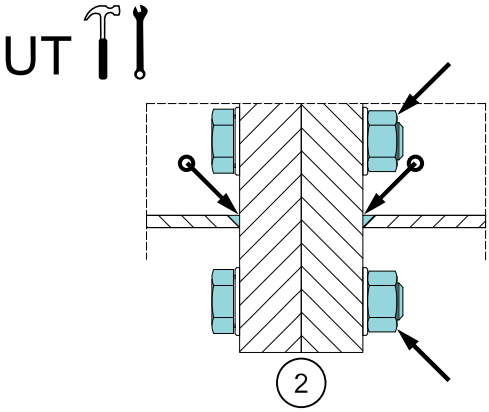

Copyright © (2016) Konecranes. All rights reserved.

Inspecting the top beams

Access-side top beam

1. Inspect the welds and flange joints around the sheave supports visually.
2. Check the tightness of screws and bolts around the sheave supports:
   2.1 Hoist rope sheave supports (1): M24, 28 per flange joint. If necessary, tighten the torque: tightening torque = 660 Nm (487 lb-ft).
   2.2 Counterweight sheave supports (2): M24, 20 per flange joint. If necessary, tighten the torque: tightening torque = 660 Nm (487 lb-ft).
   2.3 Skew machinery sheave support (3): M24, 20 per flange joint. If necessary, tighten the torque: tightening torque = 660 Nm (487 lb-ft).

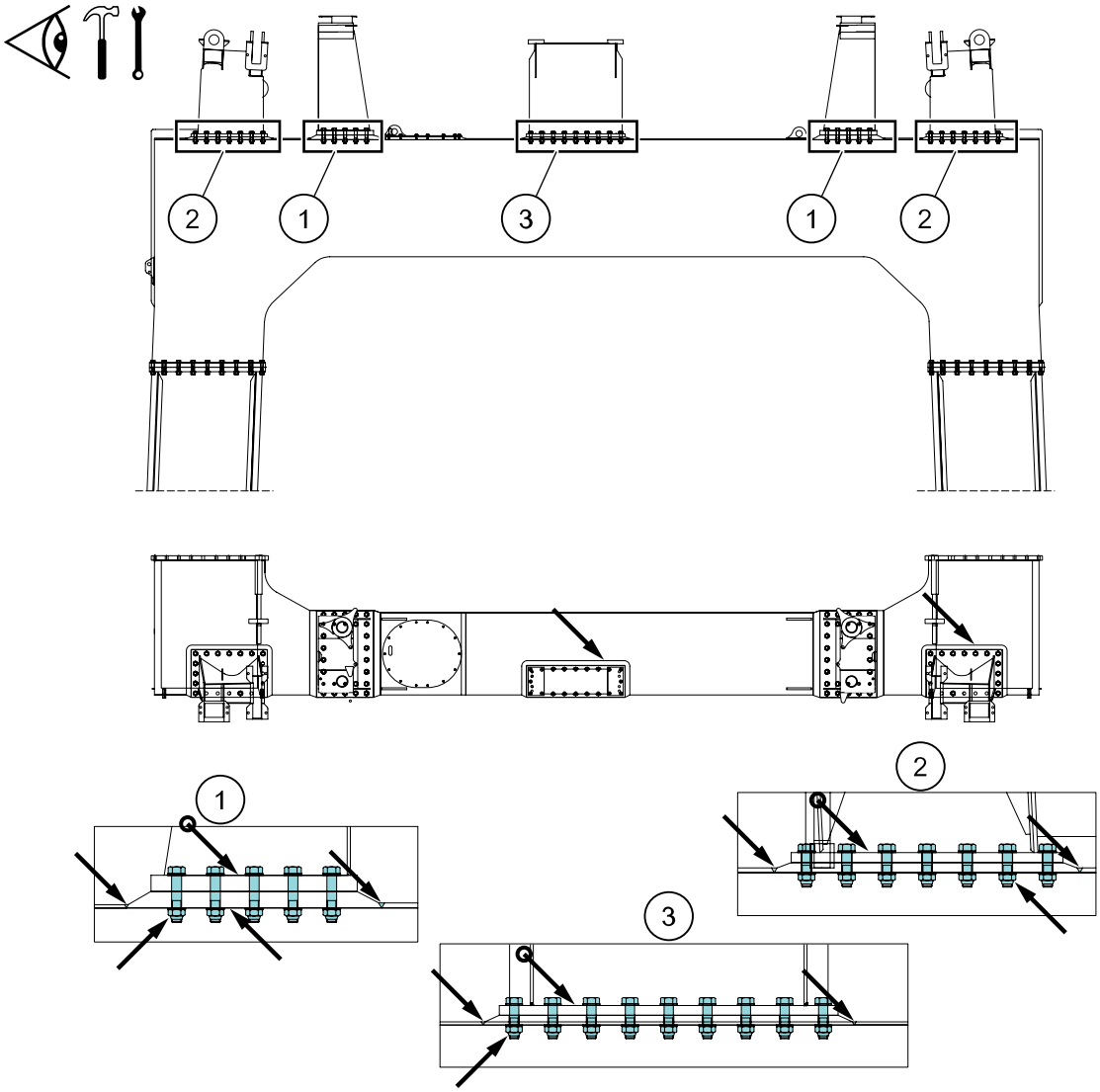

Figure 48. Inspection points for the access-side top beam

Machinery-side top beam

3. Inspect the welds and flange joints of the around sheave supports visually.
4. Check the tightness of screws and bolts around the sheave supports:
   4.1 Hoist rope sheave supports (1, 3): M24, 16 per flange joint. If necessary, tighten the torque: tightening torque = 660 Nm (487 lb-ft).
   4.2 Counterweight sheave supports (2): M24, 10 per flange joint. If necessary, tighten the torque: tightening torque = 660 Nm (487 lb-ft).

Copyright © (2016) Konecranes. All rights reserved.

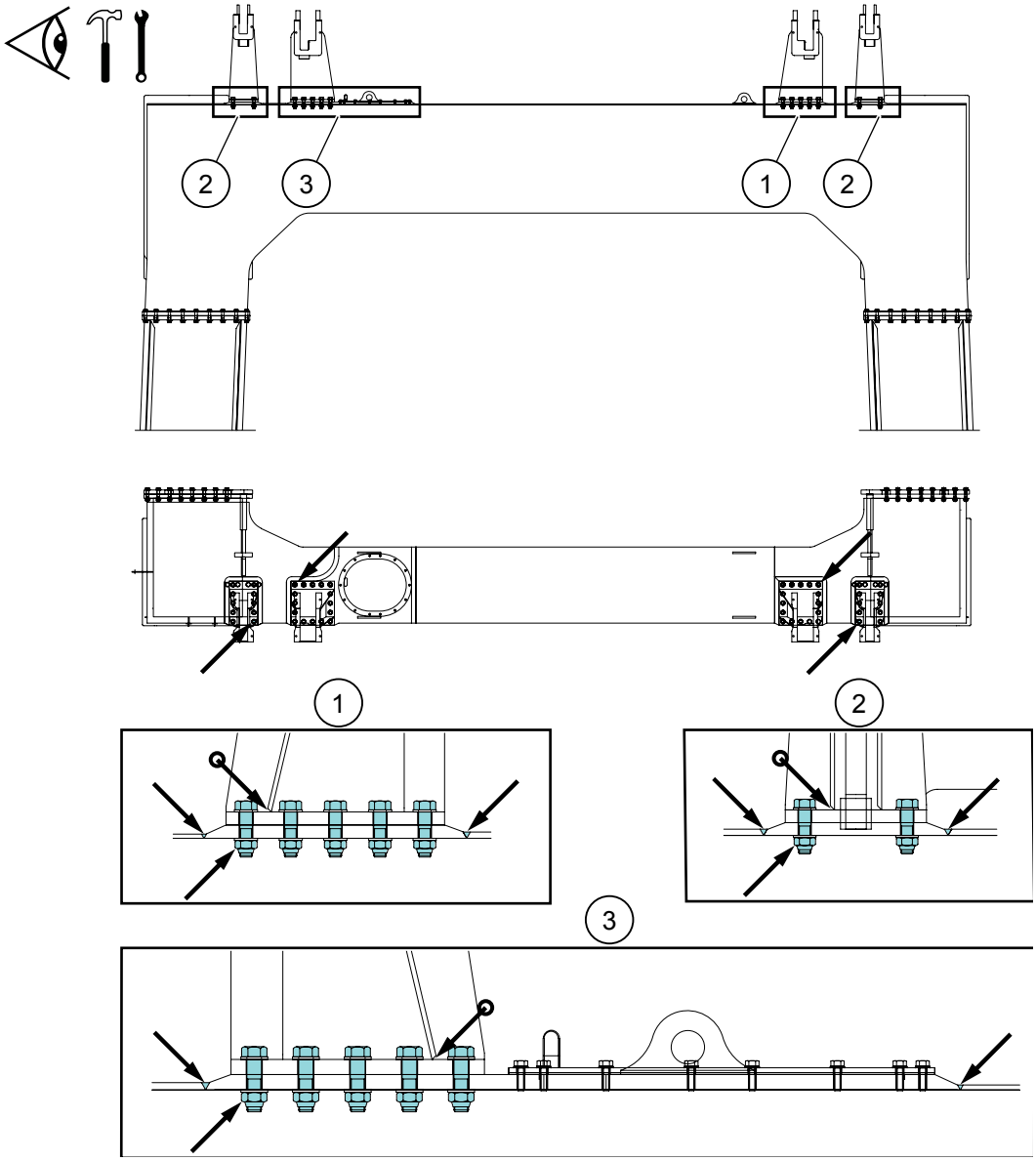

Figure 49. Inspection points for the machinery-side top beam

Copyright © (2016) Konecranes. All rights reserved.

Inspecting the bogies

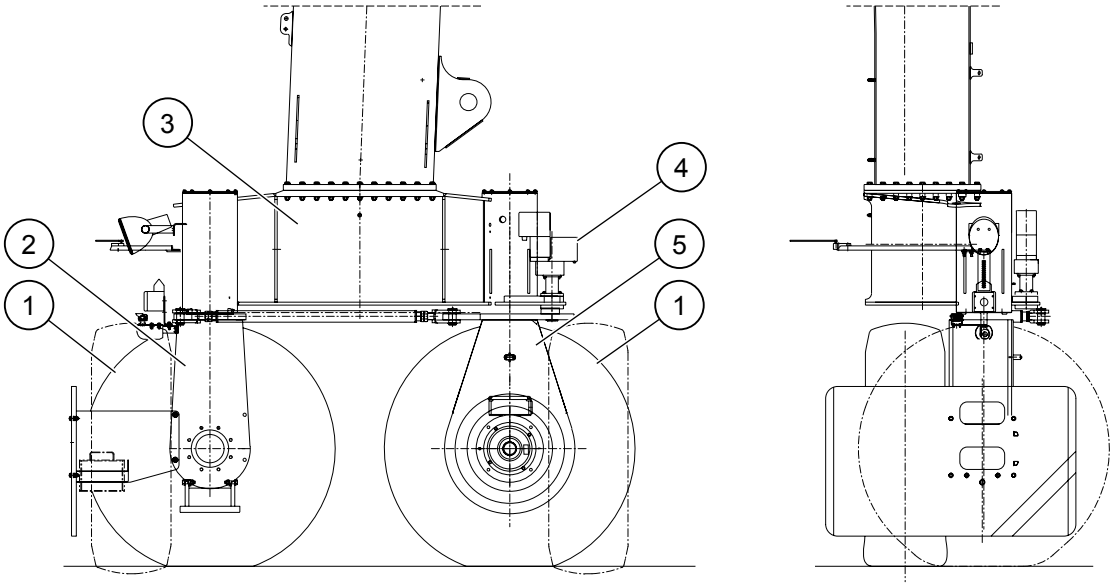

Figure 50. Inspection points for the bogies

1. *Wheel*
2. *Idle wheel support*
3. *Bogie body*
4. *Swivel lock*
5. *Drive wheel support*

Swivel lock

1. Inspect and tighten the coupling pin and swivel lock screws:

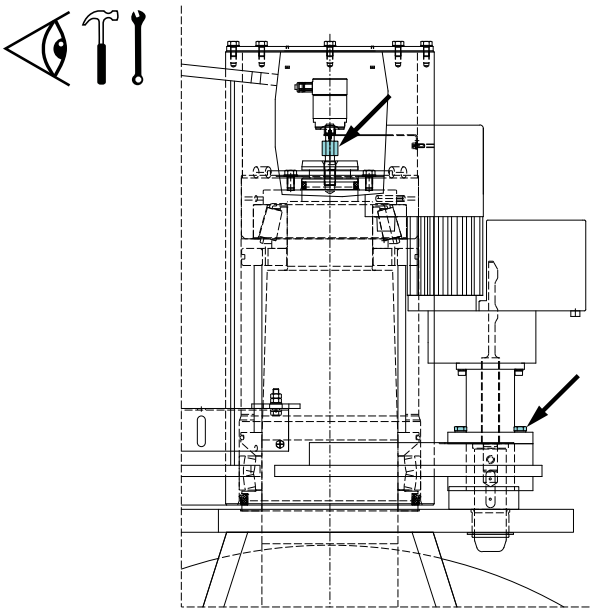

Figure 51. Inspection points for swivel lock

1. *Inspect the coupling pin (1) visually. If backlash has occurred, tighten the coupling pin.*
2. *Check the tightness of the swivel lock screws (2). If necessary, tighten the screws (M12, 4 per lock): tightening torque = 77 N-m (57 lb-ft).*

Copyright © (2016) Konecranes. All rights reserved.

Bogie body

2. Inspect the welds on the bogie body visually.

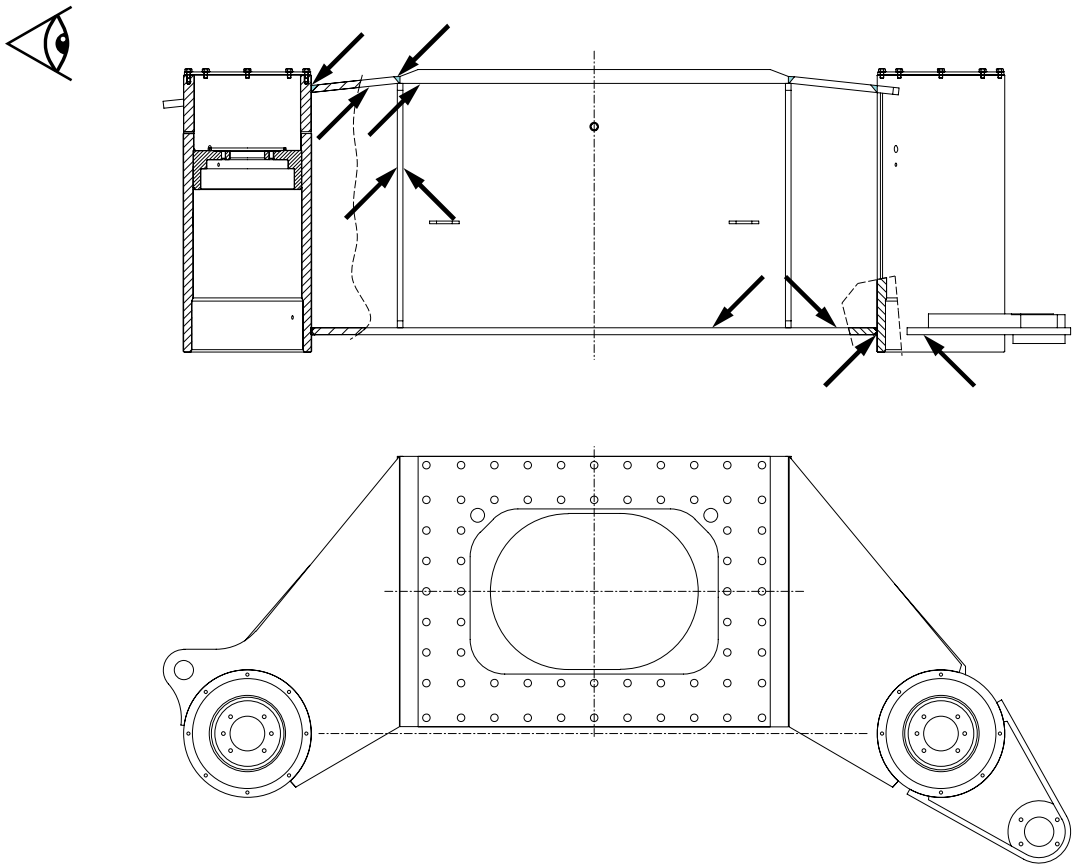

Figure 52. Inspection points for the bogie body

Idle wheel support

3. Inspect visually the welds and bolted joints on the idle wheel support.

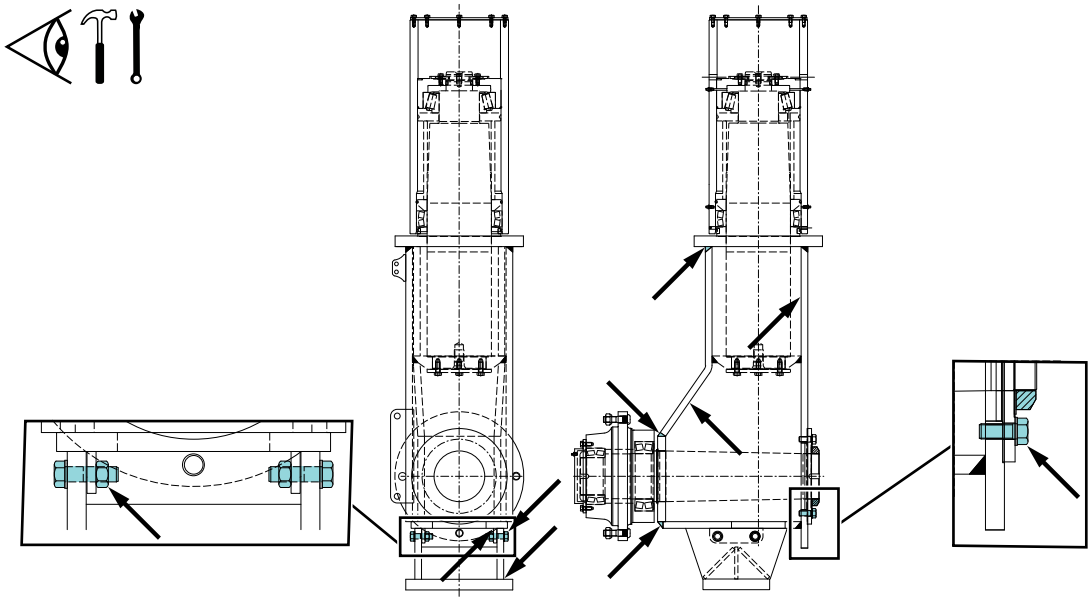

Figure 53. Inspection points for the idle wheel support

4. Inspect visually and check the tightness of the locknut and lock washer.

Copyright © (2016) Konecranes. All rights reserved.

5. Check the tightness of screws (M20, 8 per closing plate). If necessary, tighten the torque: tightening torque = 380 Nm (280 lb-ft).

Drive wheel support

6. Inspect visually the welds on the drive wheel support.

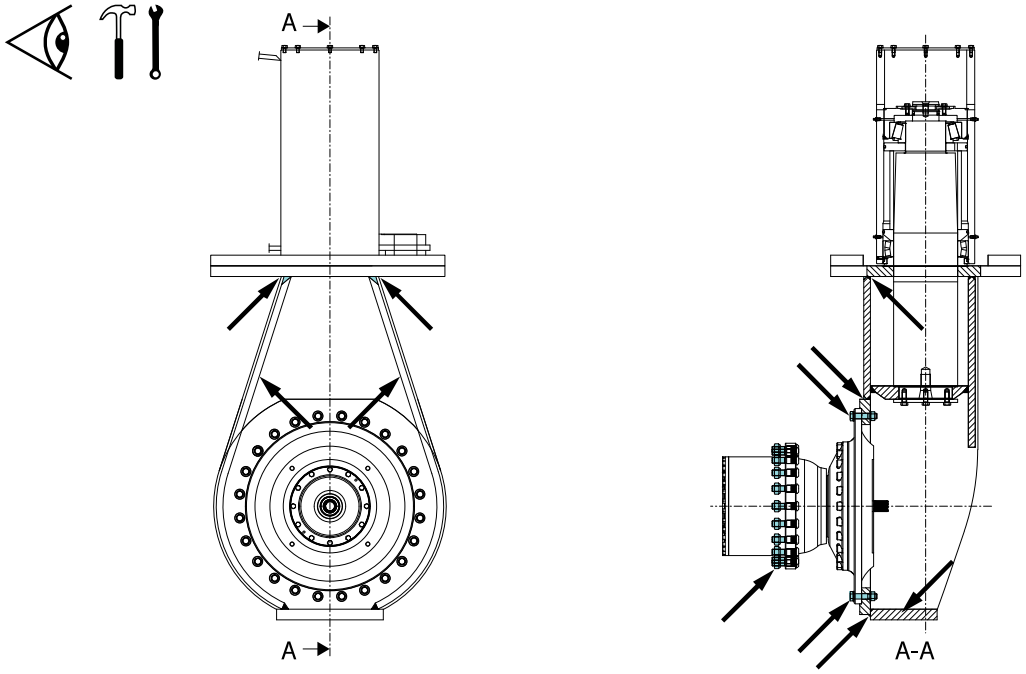

Figure 54. Inspection points for the drive wheel support

7. Check the tightness of bolts on the flange joints (M20, 24 per flange joint). If necessary, tighten the torque: tightening torque = 380 Nm (280 lb-ft)

Wheel nuts

8. Check the tightness of wheel nuts (M22, 20 per flange joint). If necessary, tighten the torque: tightening torque = 500 Nm (369 lb-ft).

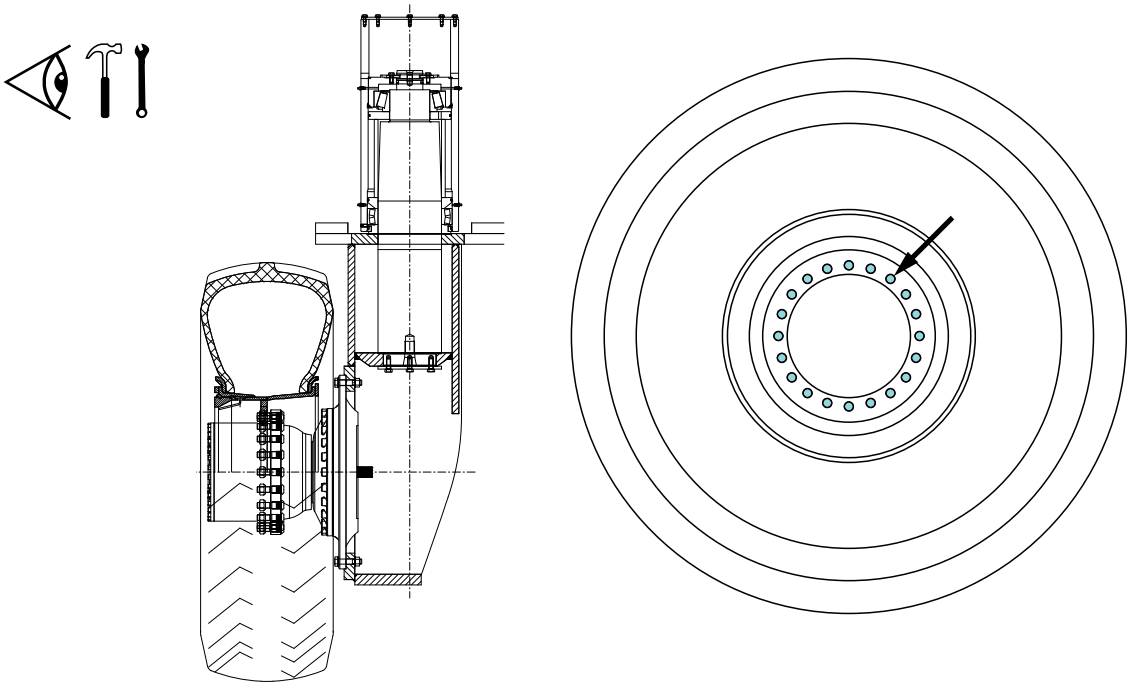

Figure 55. Inspection points for the wheels

Copyright © (2016) Konecranes. All rights reserved.

Inspecting the trolley

Sheave supports

1. Inspect the frame welds on the hoist rope sheave supports visually.

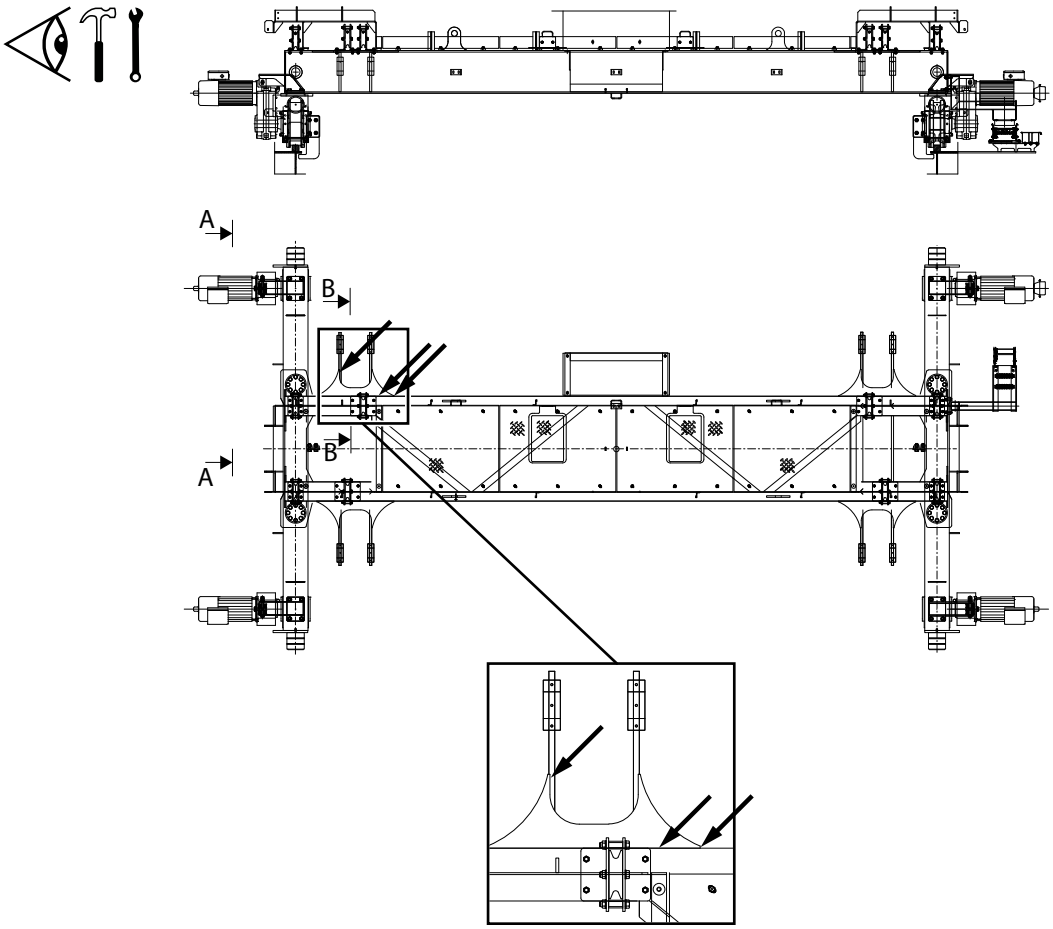

Figure 56. Inspection points for the hoist rope sheave support

2. Inspect the welds and bolted joints on the counterweight rope supports and the torque arm and drive wheel of the trolley traveling machinery visually. Check the tightness of screws and bolts.
   2.1 Screws on torque arm (1): M20, 4 per torque arm. If necessary, tighten the torque: tightening torque = 380 Nm (280 lb-ft).
   2.2 Bolts on torque arm (2): inspect the bolts visually and check the bolt tightening torque.
   2.3 Bearing housing (3): M24, 2 per bearing housing. If necessary, tighten the torque: tightening torque = 660 Nm (478 lb-ft).

Copyright © (2016) Konecranes. All rights reserved.

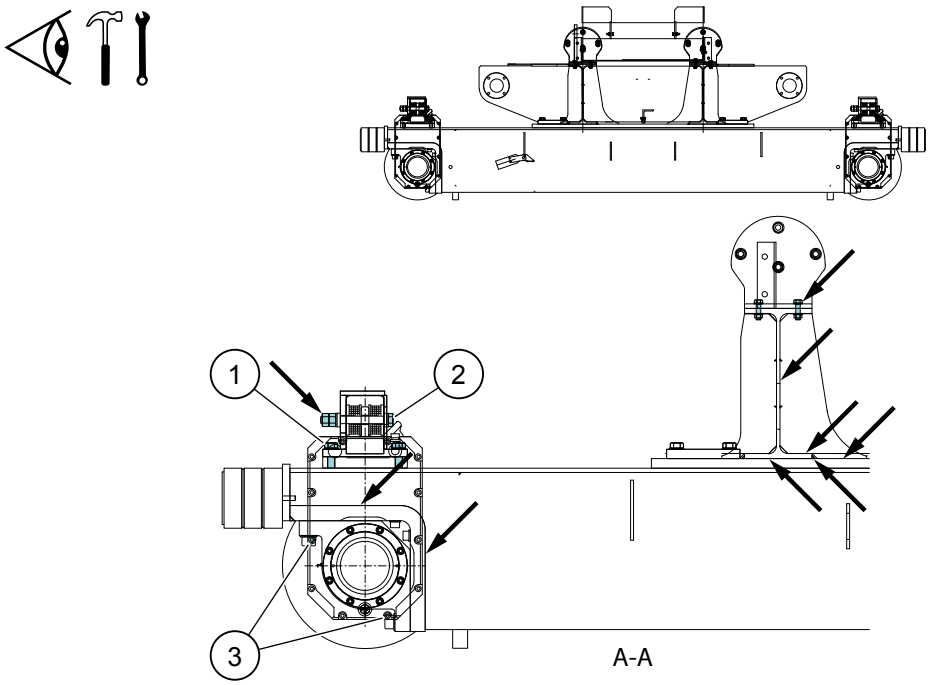

Figure 57. Inspection points for the counterweight sheave support

3. Inspect the welds and flange joints on the sheave support and the trolley frame visually.

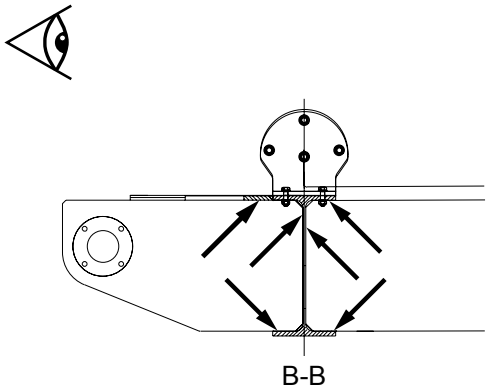

Figure 58. Inspection points for the welds and flange joints on trolley frame and sheave support

4. Check the tightness of screws on the flange joints between the sheave support and the trolley frame (M20, 8 per flange joint). If necessary, tighten the torque: tightening torque = 380 Nm (280 lb-ft).

Copyright © (2016) Konecranes. All rights reserved.

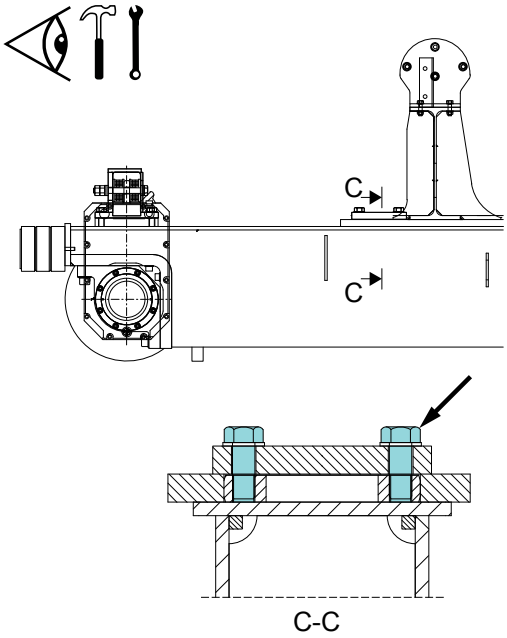

Figure 59. Inspection points for the flange joints between the sheave support and trolley frame

4.5.7 Surface treatment

Structures, components, parts, and items that are exposed to weather are protected against corrosion with different methods. Steel structures and parts are protected by painting or by hot-dip galvanizing. Stainless steel, certain other metal alloys, and polymer materials are durable against corrosion. These materials are used in small fasteners, different covers, ladders, and in different other components.

Repair painting

To repair the original painted surface that has been damaged:

1. Shot blast and paint large areas (>1 m²) according to the original painting system, as defined in *Surface preparation*.

To repair smaller damages:

2. Clean the damaged area of grease, oil, salt, and other contaminants with suitable solvents or by other means.
3. Clean the damaged area with a grinder to bare metal (St 2). Grind up to the undamaged paint smoothly. Remove any grinding dust and dirt from surfaces.
4. Using a paint brush, paint the bare metal area with an epoxy intermediate paint up to the required epoxy paint thickness. The paint must have rust-preventing agents. Do not paint epoxy on the polyurethane top coat layer area.
5. Paint the top coat with a correct color shade, surrounding by clear and natural shapes of structure, such as the welding seams and corners.

Handling

Do not do any handling before the coating system is cured to an acceptable level. Pay special attention to protection during block handling.

Surface preparation

Finishing, cleaning, and washing before abrasive blasting

Before abrasive blasting of all welding spots:

Copyright © (2016) Konecranes. All rights reserved.

- Remove sharp peaks, slags, and visible porosity holes.
- Round all corners to R2, and chamfer holes to C1 (1x45°), if not otherwise specified.
- Wash the surfaces of grease, oil, salt, and other contaminants.

Preparation grade of the surfaces is P3, according to ISO 8501-3.

Abrasive blasting

Minimum preparation grade of surfaces is Sa 2½ according to ISO 8501-1 or NACE 2/SSPC-SP 10.

Surface profile is according to ISO 8503-1 Comparator “G” Medium (profile height 50–80 µm or according to the paint manufacturer's requirements). Abrasive blasting by metal grit granules.

Abrasive blasting system must be equipped with dust, oil, and water filtering. Contractor must secure the acceptable climate conditions. Abrasive must be free from oil, grease, and salt.

Surface temperature must always be 3°C (37.4 °F) above dew point and relative humidity (RH) less than 80%.

Original painting system

General

The painting contractor must secure the acceptable climate conditions during the operation according to the paint manufacturer’s instructions. Contractor’s personnel must have sufficient skills and experience, facilities, and reference of high-quality painting work of coatings of similar products in corrosive environment. Contractor must have a suitable storage for paints (storing according to the paint manufacturer’s instructions and over 0°C (32°F) temperature) and a proper area for paint mixing.

Painting must be done according to the standard ISO 12944.

The painting system must have a suitable corrosion protection of the steel structures in coastal areas with moderate salinity. The corrosivity category is C4 (high), according to ISO 12944.

As a painting method, use high-pressure airless spray and stripe coating by paint brush.

Use stripe coating in all paint layers at the places where the spray painting cannot be reached or the layer thickness may remain incomplete. Notice especially the weld seams, corners, and protruding edges. Each layer is painted before the next coat.

All layers must have a different color shade: in two intermediate coats, use different colors in different layers. This way, it is easy to recognize the progress of the painting work and the different layers from each other.

Surface temperature of the workpiece must always be 3°C (37.4°F) above the dewpoint and the relative humidity less than 80%.

Shot blast all machined surfaces (excluding axle holes and shafts), face of plates, and surface under the bolts of flange joints. Paint zinc primer to a required thickness and protect by masking.

NOTE

Do not paint the wheel contact surface of the trolley rail. Mask the contact area of the trolley rail from both sides 25 mm (1 in) over the top during the painting work. Remove all masking after painting. Protect the rail top with rust prevention agents for transportation and storage.

Paint system for weather-exposed external steel structures

Paint system for weather-exposed external steel structures must be in the corrosivity category C4/H (durability range high), for example A1.20 (or A4.15) according to ISO 12944-5 (ISO 12944-5/A1.20-EP/PUR). Bonder type of the final top coat must be PUR (polyurethane) and the degree of glossiness is semi-gloss.

Copyright © (2016) Konecranes. All rights reserved.

The paint system may consist of the following coatings (check the coating thickness from the paint manufacturer’s instructions).

Coating	Nominal dry film thickness (NDFT)	Color
Zinc-rich epoxy primer	40 µm...60 µm	
2-pack epoxy coat (*	140 µm	
2-pack PUR finish	60 µm	For more information, see *Color shades*.
Paint system complete	240 µm	

(* Must be suitable to use as a primer to coat a bare metal surface.

Paint system for mechanical components

Paint system for mechanical components must be in corrosivity category C4/M, for example A1.19 (or A4.14) according to ISO 12944-5 (ISO 12944-5/A1.19-EP/PUR). Bonder type of the final top coat must be PUR (polyurethane) and the degree of glossiness is semi-gloss.

The paint system may consist of the following coatings (check the coating thickness from the manufacturer's instructions).

Coating	NDFT	Color
Zinc-rich epoxy primer	40 µm...60 µm	
2-pack epoxy coat	80 µm...60 µm	
2-pack PUR finish	60 µm	For more information, see *Color shades*.
Paint system complete	180 µm	

Paint system for indoor and covered weather-protected surfaces

Paint system for the indoor and covered weather-protected surfaces must be in corrosivity category C4/M, for example A1.17 (or A4.13) according to ISO 12944-5 (ISO 12944-5/A1.17-EP/PUR). The final nominal dry film thickness is 160 µm. Bonder type of the final top coat must be PUR (polyurethane) and the degree of glossiness is semi-gloss.

The paint system may consist of the following coatings (check the coating thickness from the paint manufacturer’s instructions).

Coating	NDFT	Color
Zinc-rich epoxy primer	40 µm...60 µm	
2-pack epoxy coat	60 µm	
2-pack PUR finish	60 µm	For more information, see *Color shades*.
Paint system complete	160 µm	

Powder coating

To achieve the required durability against corrosion, you can use a certified powder coating system instead of the previously described painting systems.

Copyright © (2016) Konecranes. All rights reserved.

The coatings must form a protective layer that is thick enough to provide the corrosion protection that is certified for the corrosivity category C4/M, suitable for coastal areas with moderate salinity. In addition, use zinc or iron phosphating for the surface preparation of powder coating.

The following powder coating may be used (the coating must be based on the paint manufacturer's instructions).

Coating	NDFT	Color
Polyester (PE) binder	120 µm	For more information, see *Color shades*.

Color shades

Use the following color shades for finish coating:

Structure or component	Color (semi-gloss PUR top coat)
Steel structures and parts	Light gray (RAL 7035)
Electric cubicles	Light gray (RAL 7035)
Cabin	Light gray (RAL 7035)
Diesel generator housing	Light gray (RAL 7035)
Cable-T (D5140, D5141, D5142)	Light gray (RAL 7035)
Gear units	Black gray (RAL 7021)
Motors	Black gray (RAL 7021)
Wheel rims and hubs	Black gray (RAL 7021)
Machinery components in general	Black gray (RAL 7021)
Wheel supports of bogies (*	Black gray (RAL 7021)
Counterweight	Turquoise (RAL 5018)
Trolley	Pure red (RAL 3028)
Spreader	Pure red (RAL 3028)
Frame structure of bogies (*	Pure red (RAL 3028)
Commercial components	Manufacturer's standard color

(* Wheel fenders of the bogies must have a yellow-black diagonal hazard marking at the front side. For more information, see *Yellow-black diagonal hazard markings*.

Color shade and glossiness must remain on the acceptable level without a need for major maintenance painting. To avoid chalking and fading of colors, select a paint that resists the weather and UV exposure, especially for top coats.

Anti-skid painting

Paint the marked surface area on top of the walking area of the sill beams and on box structures with anti-skid paint (silica grit-30).

Yellow-black diagonal hazard markings

Paint the visible front-side of the wheel fenders with yellow-black diagonal hazard marking where each stripe is 100 mm (4 in) wide (yellow background with black stripes). Paint other surfaces with background color only.

Copyright © (2016) Konecranes. All rights reserved.

Colors are yellow (RAL 1021) and black gray (RAL 7021). Diagonal hazard marking is also painted on any obstacles and on obstacle crossing points on marked areas. Otherwise, the colors are as defined in *Color shades*.

Internal surface treatment of open box structures

All damaged surfaces must be cleaned to level St 2 or Sa 2.

Alternative surface treatment	NDFT
Mastics or sealants (Jotamastic 87, Interseal 670 or equivalent)	150 µm
Dinitrol 482, 478, 479 or equivalent	200 µm
Tectyl 121LV, 122-A, or equivalent	200 µm

Quality control of painting

Inspect the quality of painting according to following list, as applicable:

- Maximum salt contamination: 20 mg/m² NaCl (ISO 8502-6 and 9)
- Adhesion test according to ISO 4624
- Film thickness according to ISO 19840, calibration on a smooth surface
- Holiday detection according to ISO 2960
- Environmental conditions: ambient and steel temperature, relative humidity, dew point
- Visual cleanness according to ISO 8501-1
- Visual examination according to ISO 8501-3 0. 100% all surfaces
- Visual examination of coating 100% (to determine curing, contamination, popping or pinholes, solvent retention, sagging, and other surface defects)

The definition of dry film thickness is according to the international standard ISO 12944-5, paragraph 5.4. The mean value of all the measured individual dry film thicknesses must be equal or greater than the nominal dry film thickness (NDFT). Individual dry film thicknesses of less than 80% of the nominal dry film thickness are not acceptable. Individual values between 80% and 300% of the nominal dry film thickness are acceptable as long as the overall average is equal to or greater than the nominal dry film thickness.

Calibrate the measuring instrument on a smooth surface.

Sealed structures

No surface treatment is needed inside the sealed box structures.

Galvanizing

Repairing the galvanizing defects

For repairing the galvanizing defects, there are three possible repairing methods (ASTM A 780):

- Soldering with zinc base solders
- Using zinc rich single-compound primer to nominal thickness and enamel spray. For example, Galvex, Roval
- Cold galvanizing (metallizing)

Components and parts to be galvanized

Galvanize the following components and parts:

- Steel ladders
- Walkways, platforms, gratings, and railings
- Cable trays that are made of low-alloy carbon steel (except Cable-T)
- Cable tubes

Copyright © (2016) Konecranes. All rights reserved.

Corrosion prevention of unpainted surfaces

Stainless steel, certain other metal alloys, and polymer materials are durable against corrosion. These parts do not need any additional surface treatment for improving their corrosion durability.

Protect machined and unpainted surfaces (for example, wheels, excluding rail contact surfaces) that are exposed to weather with a coating material: DINITROL 479 or 478, TECTYL 121B, or similar.

Nominal dry film thickness (NDFT) is 400 µm. Follow the coating manufacturer's surface preparation instructions.

Fasteners and other standard small parts

Component or part	Required quality
Machine bolts, nuts, washers, and screws size M12 and smaller	Stainless steel (for example, A4, see ISO 3506). Use only Nyloc nuts.
Larger bolts	Hot-dip galvanized, except high-strength bolts, nuts, and washers (strength class 10.9 or higher). See ISO 898 and ISO 10684.
Grease nipples	Stainless steel (type specified in drawings).
Fixing elements for the grating of walkways	Hot-dip galvanized or A4 stainless steel material.
Axles with threaded pulling-out holes with treads	Threaded holes on the bogies and under the sillbeam, holes covered by plastic plugs or screws. For more information, see the Konecranes standard drawing D5030.

4.6 Lubrication

Lubrication point drawings for each BOXHUNTER component help with finding the exact locations of the lubrication points.

The lubrication points are shown with a reference number. Each drawing has a table listing the points and showing the quantity of each item. Grease nipples are identified with letter "N".

The lubrication information for each item is indicated with three parameters:

H-LP-LG where:

- H = Hours interval (diesel running)
- LP = Lubrication procedure
- LG = Lubricant group

The following abbreviations are used for the different lubrication procedures:

- OL = Oil level check / top-up if needed
- RO = Replace oil
- OC = Oil can (or spray)
- GG = Grease gun
- GB = Grease brush
- RCG = Replace coupling grease
- RGG = Replace gear grease

The following groups are the recommended lubricant groups:

Copyright © (2016) Konecranes. All rights reserved.

- Group 1: Gearboxes (oil splash lubricated) and transmission chains
- Group 3: Anti-friction bearings and plain bearings (grease lubricated)
- Group 4A: Transmission gears (grease lubricated)
- Group 4B: Steel wire ropes (grease lubricants)
- Group 5: Electro-hydraulic thrusters
- Group 8: Pumped or central grease lubrication system
- Group 10: Light oil can
- Group 11: Grease-packed couplings

For example: 3000-RO-01 = Every 3000 hours, replace oil with a lubricant from group 1.

For information on the lubricant groups, see *Recommended lubricants*.

NOTE ***The running hours interval has an equivalent calendar interval as detailed in Lubrication schedule.***

4.6.1 Safety during lubrication

⚠ WARNING

MOVING MACHINERY HAZARD

Moving or rotating machinery may cause accidents during the maintenance operations, which could lead to death or severe injury.

Prevent all of the crane drive motors from operating by switching off the power supply to the drives. Stop also the main diesel alternator set and switch off the alternator battery power. Make sure that the trolley and the hoist cannot move, and the spreader is resting on the supporting brackets or on top of a container with slack ropes.

⚠ WARNING

IRRITATING SUBSTANCE HAZARD

The machine contains several chemical substances, which may cause skin irritation and allergies. Risk of injury when in prolonged contact with skin.

When handling lubricants and oils, avoid direct contact with the skin. Use safety gloves. Immediately wash skin that comes in contact with chemical substances.

⚠ WARNING

ENVIRONMENTAL POLLUTION HAZARD

Used oil is waste material and harmful to the natural environment.

Dispose of the waste oil according to local regulations.

Copyright © (2016) Konecranes. All rights reserved.

4.6.2 Lubrication points for the gantry

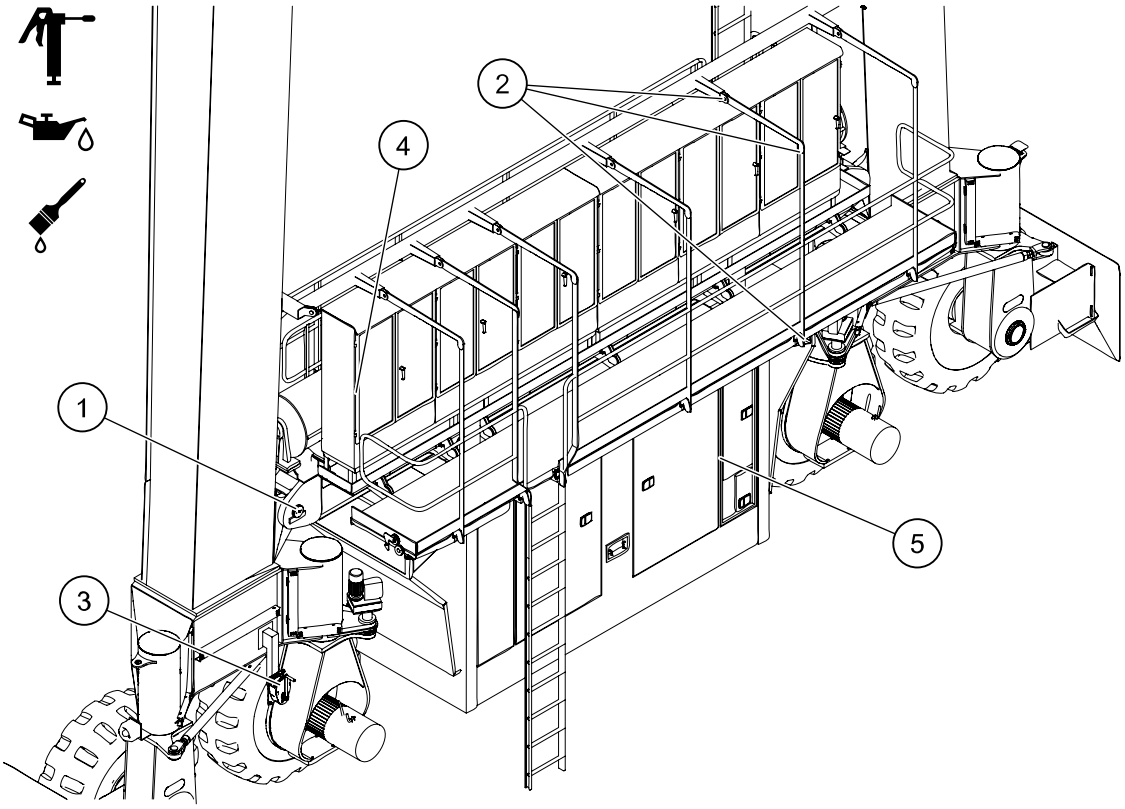

Figure 60. Lubrication points for the gantry (machinery side)

Equipment	Ref	Item	Lubrication	Quantity	OK
Leg frame	1	Structural joint pins	1000-GG-03	4 x 1N	
Foldable service platform	2	Hinges	3000-OC-10	18	
Foldable service platform	3	Winch machinery wire rope	1000-GB-08	1	
Electrical equipment cubicles	4	Door hinges	4000-OC-10	36	
Diesel alternator set	5	Door hinges	1000-OC-10	8	

Copyright © (2016) Konecranes. All rights reserved.

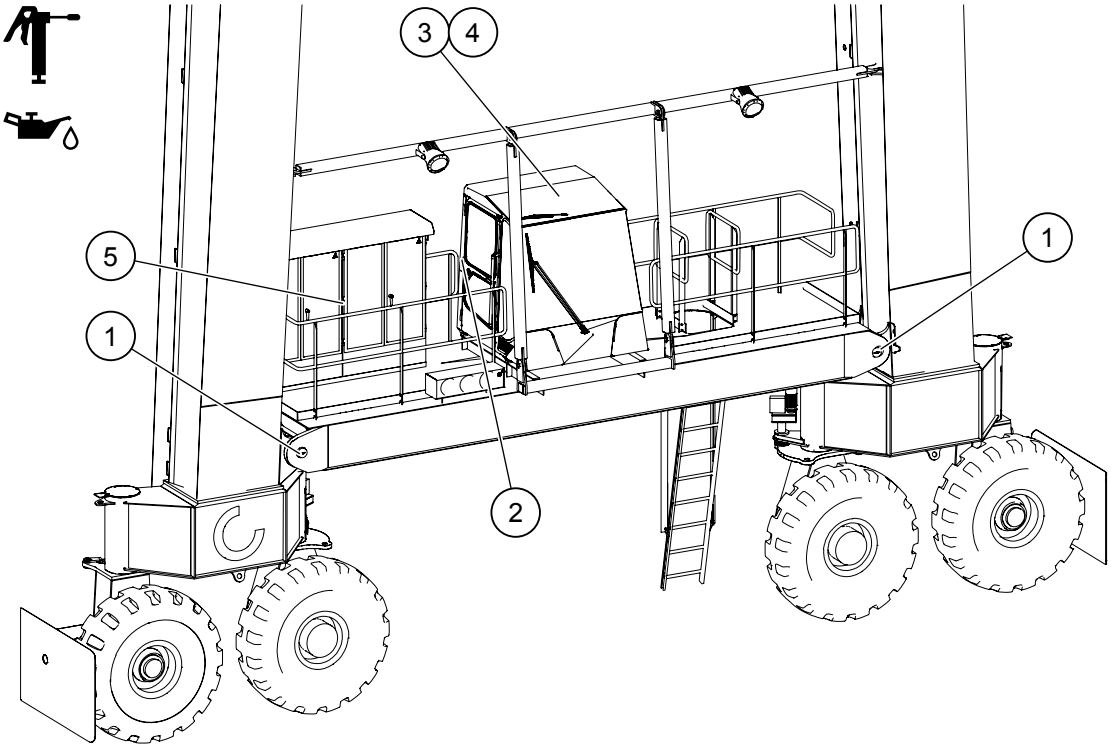

Figure 61. Lubrication points for the gantry (access side)

Equipment	Ref	Item	Lubrication	Quantity	OK
Leg frame	1	Structural joint pins	1000-GG-03	4 x 1N	
Cabin	2	Door hinges	1000-GG-08	4 x 1N	
Cabin	3	Compressor	See the manufacturer's own instructions		
Cabin	4	Condenser	See the manufacturer's own instructions		
Electrical equipment cubicle	5	Door hinges	4000-OC-10	6	

Copyright © (2016) Konecranes. All rights reserved.

4.6.3 Lubrication points for the bogie

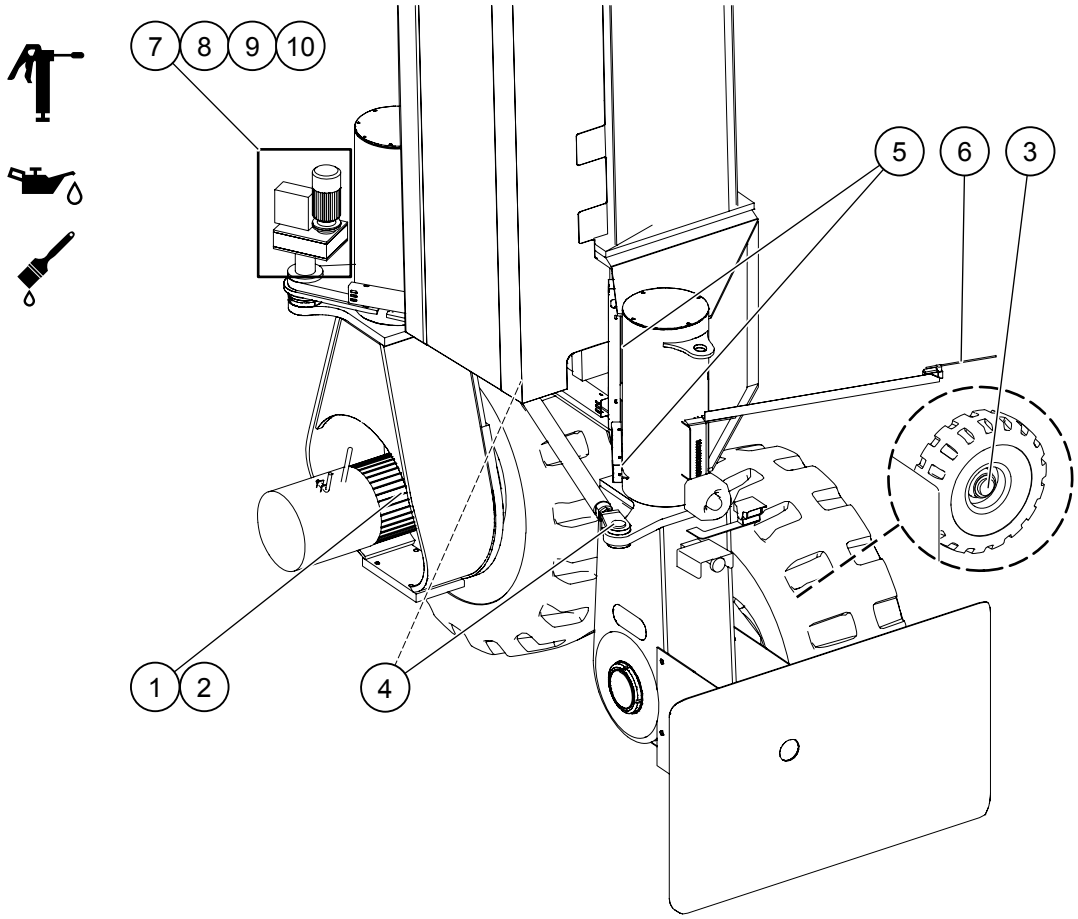

Figure 62. Lubrication points for the bogie

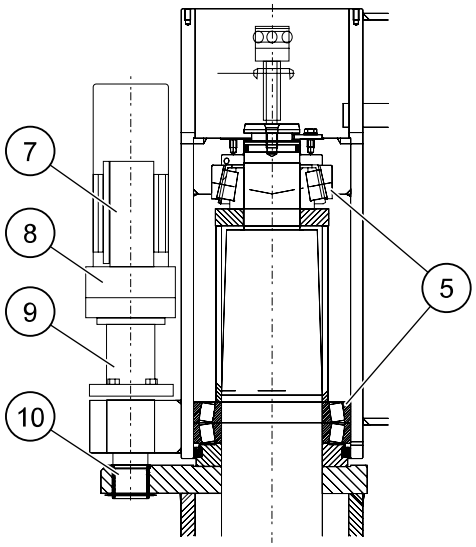

Figure 63. Lubrication points for the bogie

There are four bogies in the BOXHUNTER crane. The following table lists the quantities per bogie:

Copyright © (2016) Konecranes. All rights reserved.

Equipment	Ref	Item	Lubrication	Quantity	OK
Driving wheel	1	Traveling machinery motor coupling	16 000-RCG-11	1	
Driving wheel	2	Traveling machinery hub gear reducer	1000 h: Check if any oil leakage. 4000 h: Replace oil. Lubricant: API GL-5 80W-90	1	
Idle wheel	3	Wheel axle bearings	1000-GG-03	1 x 1N	
Connecting tie rod	4	Bushings	1000-GG-03	1 x 2N	
Bogie balancer	5	Kingpin bearings	1000-GG-03	1 x 8N	
Catwhisker limit switch	6	Actuating whisker	1000-OC-10	1	
Swivel lock	7	Motor coupling	8000-RCG-11	1	
Swivel lock	8	Gear reducer	8000-RGG-03	1 x 1N	
Swivel lock	9	Locking pin	1000-GG-03	1 x 1N	
Swivel lock	10	Bushing	1000-GB-03	1	

4.6.4 Lubrication points for the trolley

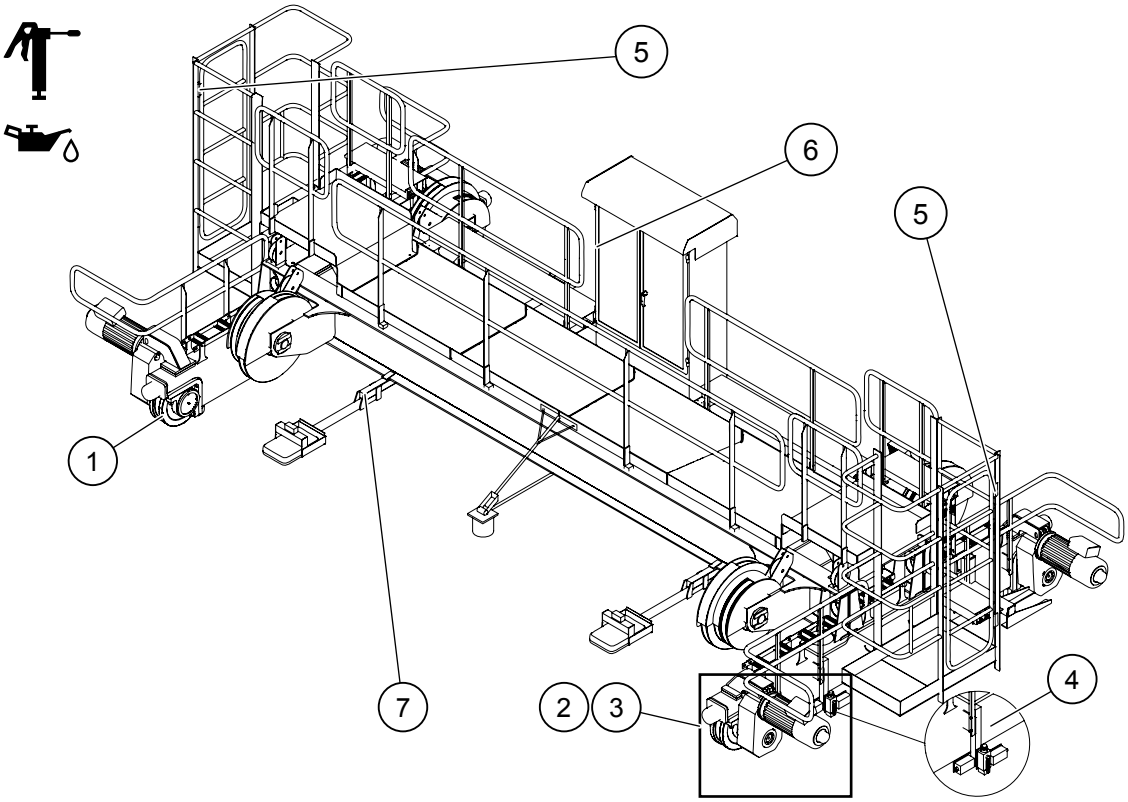

Figure 64. Lubrication points for the trolley

Copyright © (2016) Konecranes. All rights reserved.

Equipment	Ref	Item	Lubrication	Quantity	OK
End carriages	1	Wheel bearings	1000-GG-03	8 x 1N	
Traveling machinery units	2	Gear reducer	500-OL-01 4000-RO-01 See also the manufacturer's instructions	4	
Traveling machinery units	3	Motor coupling	16 000-RCG-11	4	
Mechanical limit switch	4	Lever mechanism	1000-OC-10	1	
Access gates	5	Hinges	4000-OC-10	4	
Electrical equipment cubicle	6	Door hinges	4000-OC-10	6	
LED floodlights	7	Swiveling bracket hinges	4000-OC-10	4	

4.6.5 Lubrication points for the hoisting machinery unit

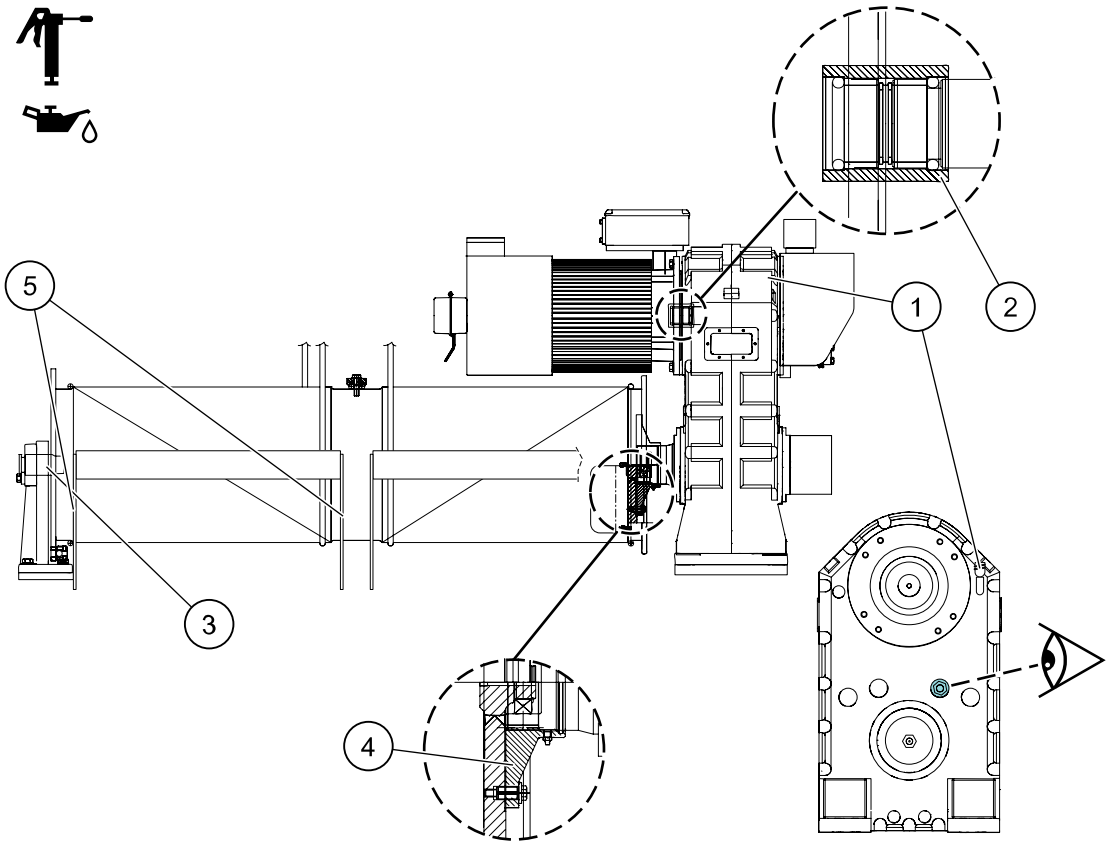

Figure 65. Lubrication points for the hoisting machinery unit

There are two hoisting machinery units in the BOXHUNTER crane. The following table lists the quantities per unit:

Copyright © (2016) Konecranes. All rights reserved.

Equipment	Ref	Item	Lubrication	Quantity	OK
Hoisting machinery	1	Gear reducer*	500-OL-01 4000-RO-01** See also the manufacturer's instructions	1	
Hoisting machinery	2	Motor coupling	6000-RCG-11	1	
Rope drum	3	Drum bearing	1000-GG-03	1 x 1N	
Rope drum	4	Drum coupling	1000-GG-11	1 x 2N	
Rope drum	5	Pressure roller mechanism	1000-OC-10	4	

*There is a sight glass on the back of the gear reducer for checking the oil level (see the illustration).

**Replace the lubricant after 4000 hours, or take a sample to check if the lubricant can still be used.

4.6.6 Lubrication points for the skew machinery

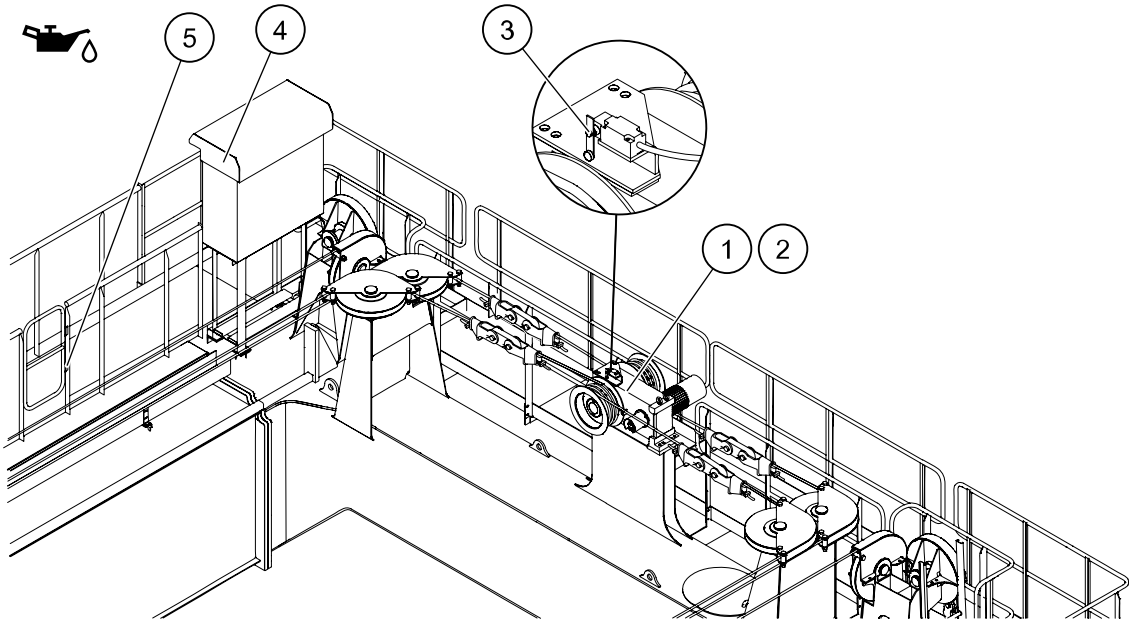

Figure 66. Lubrication points for the skew machinery

Copyright © (2016) Konecranes. All rights reserved.

Equipment	Ref	Item	Lubrication	Quantity	OK
Skew machinery	1	Gear reducer	500-OL-01 4000-RO-01 See also the manufacturer's instructions	1	
Skew machinery	2	Coupling	6000-RCG-11	1	
Mechanical limit switch	3	Lever mechanicm	1000-OC-10	1	
Electrical equipment cubicle	4	Door hinges	4000-OC-10	4	
Access gates*	5	Hinges	4000-OC-10	4	

*There is an access gate on the both main girders.

4.6.7 Lubrication points for the spreader

Refer to the manufacturer's maintenance instructions on the lubrication of the spreader parts.

4.6.8 Lubrication points for the main diesel alternator set

Refer to the manufacturer's maintenance instructions on the lubrication of the diesel engine and related parts.

4.6.9 Lubricating the gear reducers

Principles of gear reducer lubrication

⚠ WARNING

MOVING MACHINERY HAZARD

Moving or rotating machinery can cause accidents during the maintenance operations, which could lead to death or severe personal injury.

See that the main isolator for machineries is switched off before you start any maintenance operation.

Before changing the gear reducer oil, prevent the movements of machinery:

- Make sure that the trolley is at the normal parking position.
- Make sure that the hoist is not supporting any load, and the spreader is resting on the supporting brackets (500 mm) above the ground level (or on top of a container) with slack ropes.
- Prevent all of the crane drive motors from operating by switching off the power supply to the drives.
- Stop the diesel alternator set and switch off the alternator battery power.

The purpose of gear reducer lubrication is to form an oil film that:

- Prevents direct metal contact where the teeth touch
- Lubricates the bearings
- Dissipates the heat generated out to the surrounding air, through the gear reducer casing (or via an oil radiator).

Copyright © (2016) Konecranes. All rights reserved.

To fulfill all of these functions, make sure that the new oil is of correct type and grade for the machinery.

NOTICE

RISK OF MACHINERY DAMAGE

Impure or contaminated oil damages the gear reducer, and low-quality lubricants can significantly reduce the lifetime of the gear reducer.

Do not use old or contaminated oil. Do not use flushing oil for the normal operation of the gear reducer (this invalidates the warranty).

The oil recommendation plate on the gear reducer specifies the correct lubricant.

The peripheral speed of the gear wheels and the structure and size of the gear reducer determine the lubrication method.

Table 27. Lubrication methods

Method of lubrication	Description
Bath lubrication	Bath lubrication is a method used for lubricating most types of gear reducers. In the bath lubrication, the oil level is selected so that the bearings are at least partially submerged.
Grease lubrication	For certain applications, grease lubrication may be used for individual gear reducer bearings. In each case, there is an external grease nipple for the bearing, and an internal seal between the gear reducer oil and the bearing.
Oil warming	An oil warmer may be needed in cold climates, if the oil temperature can drop below its solidification point when the crane is parked. In this case, an electric heating element is fitted into the gear reducer oil reservoir.
Oil cooling	Usually, the gear reducer is cooled by the surrounding air. In hot climates, an extra cooling system may be needed if the oil temperature goes above its maximum allowable value. The cooling system may consist of a separate heat exchanger or an external fan.

NOTE

Replacement gear reducers are delivered from the factory without oil. There is no need to remove the corrosion inhibitor inside the gear reducer before filling the gear reducer with the correct oil. Always fill the gear reducer with oil before use.

Copyright © (2016) Konecranes. All rights reserved.

Gear oil quantities

Table 28. Gear oil quantities (BOXHUNTER)

Gear reducer location	Oil quantity		Lubrication group
	Liters	Imperial gallons	
Bogie	6.5	1.42	1
Hoisting machinery unit	45	9.89	1
Trolley traveling machinery	6	1.31	1
Skew machinery	5	1.09	1
Swivel lock (bogie)(1	Grease-packed		3

(1 These gear reducers are packed with lithium-based EP grease and are each fitted with a grease nipple. Lubricate with the grease gun.

NOTE ***Do not mix any mineral oil based lubricant in these gear reducers.***

Changing gear oil for the first time

Carry out the first gear reducer oil change after 100 hoisting hours or 500 diesel hours. For more information, see the component-specific lubrication schedules.

To change the gear reducer oil for the first time:

1. Reserve a suitable container for the used oil.
2. Attach a hose between the gear reducer drain tap and the container.
3. Open the drain tap and let the lubricant to flow to the container. Close the tap after all oil has flown to the container.

NOTICE

MACHINE MALFUNCTION HAZARD

Blowing pressurized air through the breather plug may damage the gear reducer sealings.

Never use pressurized air to increase oil flow.

4. To clean out the gear reducer, fill the gear reducer temporarily with flushing oil.

NOTICE

MACHINE MALFUNCTION HAZARD

Running the gear reducer with flushing oil may damage the component.

Never run the gear reducer with flushing oil.

5. Reserve a container for flushing oil and collect the flushing oil via the same hose to a container. When all flushing oil has drained out to the container, close the drain tap and detach the hose.
6. Fill the gear reducer with a new lubricant. See component-specific instructions on replacing the gear reducer oil.

Copyright © (2016) Konecranes. All rights reserved.

Checking the hub gear reducer oil level and filling up oil

⚠ WARNING

MACHINE MALFUNCTION HAZARD

When you open the oil fill plug, water vapor, and other contamination may enter inside the hub gear reducer.

Do not open the oil fill plug to check the oil level unless you have noticed a major oil leakage, or you are replacing the whole lubricant.

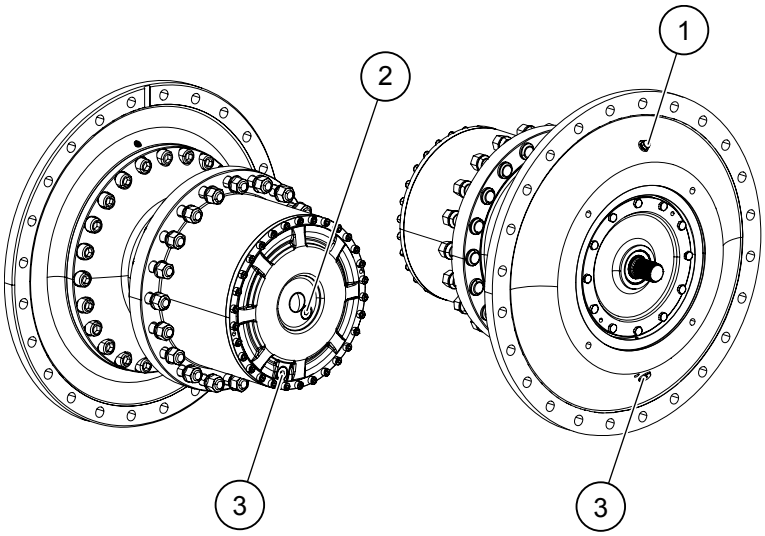

Figure 67. Gantry hub gear reducer (x4)

1. *Breather plug*
2. *Oil fill plug and oil level check*
3. *Drain tap (x 2)*

When you notice a major oil leakage from a hub gear reducer, check the hub gear reducer oil level and fill up oil:

1. Rotate the hub so that the drain tap (3) is at the bottom of the hub and the oil fill plug (2) is in the correct angle. Wait that the lubricant level lowers to the bottom of the hub (the waiting time is 30 minutes at 20°C). As a precaution, place a drain pan under the plug to catch any fluid that may leak out. Remove the oil fill plug and check the oil level via the opening. The correct oil level (1) is just at the bottom of the fill plug opening:

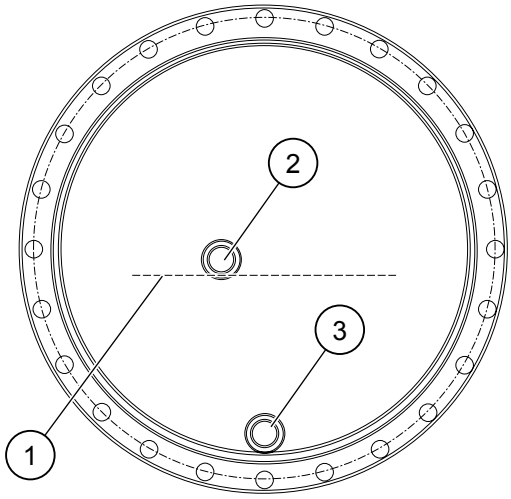

Copyright © (2016) Konecranes. All rights reserved.

2. If needed, fill up the hub gear reducer with the correct type of lubricant: API GL-5 80W-90.

Replacing the hub gear reducer oil

⚠ WARNING

MACHINE MALFUNCTION HAZARD

When you open the oil fill plug, water vapor, and other contamination may enter inside the hub gear reducer.

Do not open the oil fill plug to check the oil level unless you have noticed a major oil leakage, or you are replacing the whole lubricant.

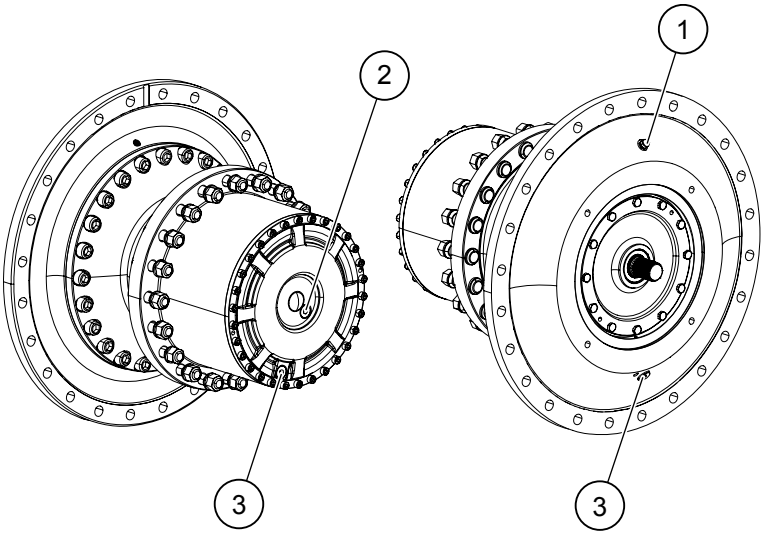

Figure 68. Gantry hub gear reducer (x4)

1. *Breather plug*
2. *Oil fill plug and oil level check*
3. *Drain tap (x 2)*

Replace the hub gear reducer oil after 4000 running hours (once a year).

NOTE ***During the oil replacement operation, check also the condition of the breather plug.***

Draining the old lubricant from two separate oil reservoirs:

1. Rotate the hub so that the drain tap (3) is at the bottom of the hub and the oil fill plug (2) is at the top.
2. Place a drain pan under the drain tap and open the tap. Collect the oil (approximately 3.4 liters) from the oil reservoir to the pan. Close the drain tap.
3. At the motor side: rotate the flange so that the drain tap (3) is at the bottom and the breather plug (1) at the top.
4. Place a drain pan under the drain tap at the motor side and open the tap. Collect the oil (approximately 3 liters) from the motor side oil reservoir to the pan. Close the drain tap.

Filling the hub gear reducer with the new gear reducer oil:

5. Rotate the hub so that the drain tap (3) is at the bottom of the hub and the oil fill plug (2) is at the top.
6. Remove the oil fill plug (2) and fill in oil via the opening. Check the correct amount oil from the chapter *Gear oil quantities*.
   Use the lubricant: API GL-5 80W-90.

Copyright © (2016) Konecranes. All rights reserved.

7. Install the oil fill plug back to its position and rotate the hub 360 degrees so that the drain tap is again at the bottom of the hub.
8. Wait for 30 minutes so that the lubricant lowers to the bottom of the hub.
   Waiting time is 30 minutes at 20°C. If the temperature is lower, the waiting time can be longer.
9. Open the oil fill plug (2) to check the oil level. The correct oil level (1) is just at the bottom of the fill plug opening:

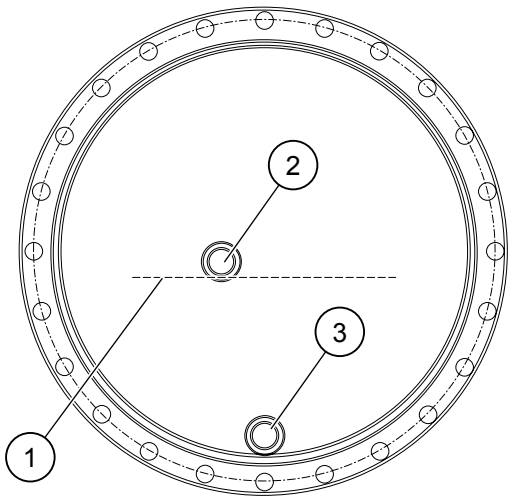

Copyright © (2016) Konecranes. All rights reserved.

Checking the gear reducer oil level and filling up oil

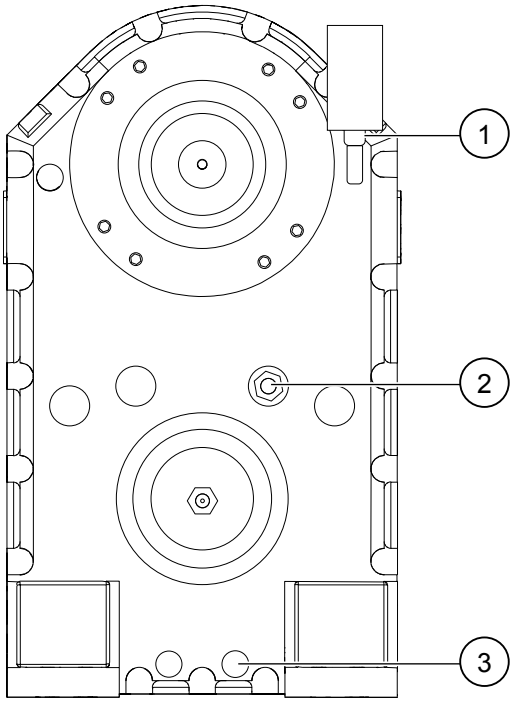

Figure 69. Hoisting machinery unit gear reducer (x2)

1. *Breather plug (desiccant breather) and oil filling*
2. *Sight glass*
3. *Drain tap*

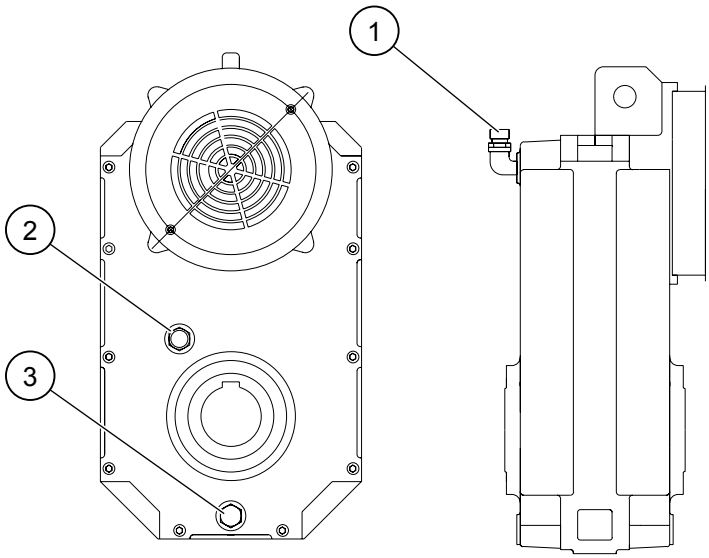

Figure 70. Trolley traveling machinery gear reducer (x4)

1. *Breather plug and oil filling*
2. *Sight glass*
3. *Drain tap*

Copyright © (2016) Konecranes. All rights reserved.

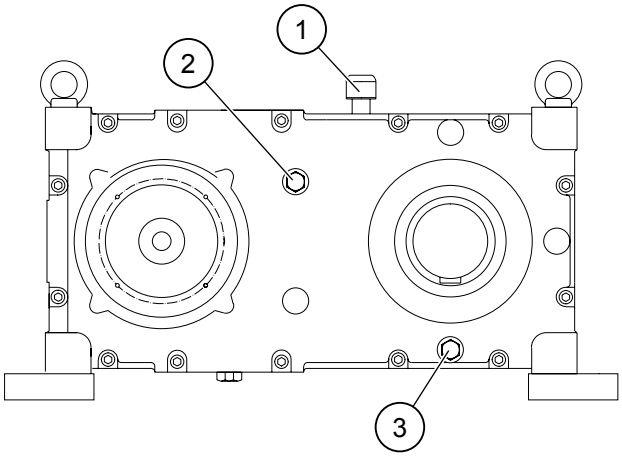

Figure 71. Skew machinery gear reducer (x1)

1. *Breather plug and oil filling*
2. *Sight glass*
3. *Drain tap*

NOTE ***The following instructions are not valid for the swivel lock gear reducers which are packed with lithium-based EP grease and fitted with a grease nipple. Lubricate the swivel lock gear reducers with a grease gun.***

To check the gear reducer oil level and filling up oil:

1. Check that the sight glass oil level is between the upper and lower markings on the glass. If there are no markings, the level can be anywhere within the range of the sight glass.

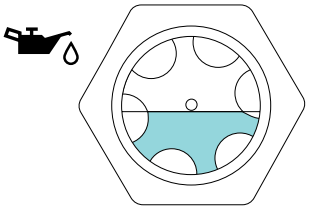

Figure 72. Sight glass

NOTE ***Due to the surface tension of the lubricant, the sight glass may show a false oil surface, even though the true oil level in the gear reducer is much lower.***

2. If needed, fill up the gear reducer with the correct type of lubricant.
   The oil filling is done via the breather plug.

Copyright © (2016) Konecranes. All rights reserved.

Replacing the trolley traveling machinery gear reducer oil

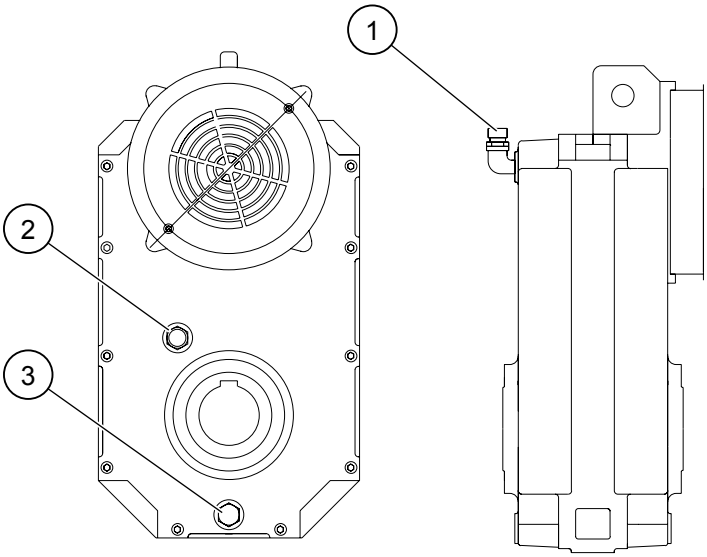

Figure 73. Trolley traveling machinery gear reducer

1. *Breather plug and oil filling*
2. *Sight glass*
3. *Drain tap*

Replace the traveling machinery gear reducer oil after 4000 running hours (once a year). For more information on the lubricant to be used, see Group 1: Gearboxes (oil splash lubricated) and transmission chains (page 282).

NOTE ***During the oil replacement operation, replace also the breather plug.***

To replace the traveling machinery gear reducer oil:

1. Reserve a suitable container for the used oil.
2. Connect a hose between the gear reducer drain tap and the container.
3. Open the drain tap and let the lubricant to flow to the container. When all the oil has drained out, remove the hose and close the drain tap.

NOTICE

MACHINE MALFUNCTION HAZARD

Blowing pressurized air through the breather plug may damage the gear reducer sealings.

Never use pressurized air to increase oil flow.

4. Fill in the gear reducer with a new lubricant. See the correct oil amount from the table in *Gear oil quantities*. When fillling in the oil, monitor the oil level via the sight glass at the same time.
   The correct oil level is between the upper and lower markings on the glass:

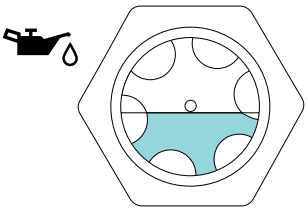

Copyright © (2016) Konecranes. All rights reserved.

Replacing the hoisting machinery gear unit reducer oil

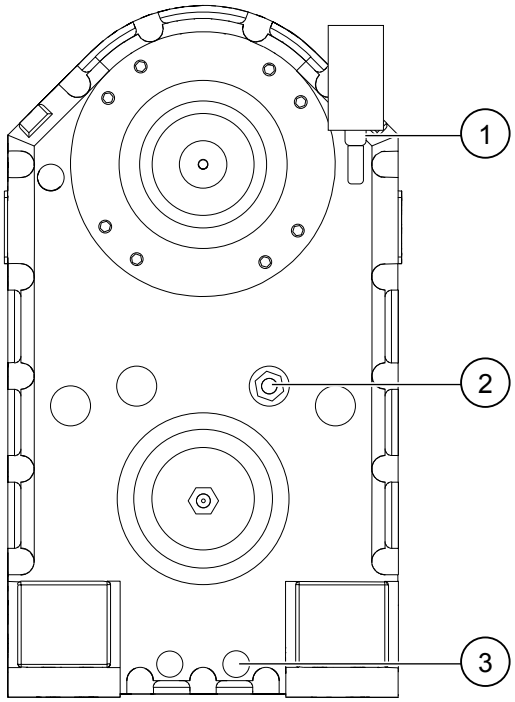

Figure 74. Hoisting machinery unit gear reducer

1. *Breather plug (desiccant breather) and oil filling*
2. *Sight glass*
3. *Drain tap*

Replace the hoisting machinery unit gear reducer oil after 4000 running hours (once a year). For more information on the lubricant to be used, see Group 1: Gearboxes (oil splash lubricated) and transmission chains (page 282).

NOTE ***During the oil replacement operation, replace also the desiccant breather installed on the breather.***

NOTE ***Desiccant breather must also be replaced when the color of the indicator granules in the air filter changes from ruby-red (= active) to light orange (= replace).***

To replace the hoisting machinery unit gear reducer oil:

1. Reserve a suitable container for the used oil.
2. Connect a hose between the gear reducer drain tap and the container.
3. Open the drain tap and let the lubricant to flow to the container. When all the oil has drained out, remove the hose and close the drain tap.

NOTICE

MACHINE MALFUNCTION HAZARD

Blowing pressurized air through the breather plug may damage the gear reducer sealings.

Never use pressurized air to increase oil flow.

4. Fill in the gear reducer with a new lubricant. See the correct oil amount from the table in *Gear oil quantities*. When fillling in the oil, monitor the oil level via the sight glass at the same time.
   The correct oil level is between the upper and lower markings on the glass:

Copyright © (2016) Konecranes. All rights reserved.

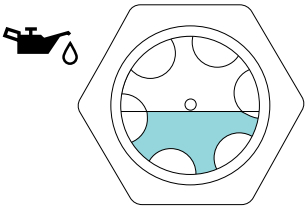

Replacing the skew machinery gear reducer oil

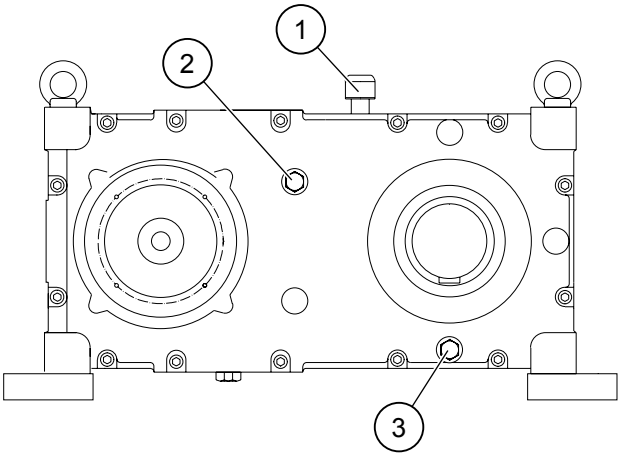

Figure 75. Skew machinery gear reducer

1. *Breather plug and oil filling*
2. *Sight glass*
3. *Drain tap*

Replace the skew machinery gear reducer oil after 4000 running hours (once a year). For more information on the lubricant to be used, see Group 1: Gearboxes (oil splash lubricated) and transmission chains (page 282).

NOTE ***During the oil replacement operation, replace also the breather plug.***

To replace the skew machinery gear reducer oil:

1. Reserve a suitable container for the used oil.
2. Connect a hose between the gear reducer drain tap and the container.
3. Open the drain tap and let the lubricant to flow to the container. When all the oil has drained out, remove the hose and close the drain tap.

NOTICE

MACHINE MALFUNCTION HAZARD

Blowing pressurized air through the breather plug may damage the gear reducer sealings.

Never use pressurized air to increase oil flow.

4. Fill in the gear reducer with a new lubricant. See the correct oil amount from the table in *Gear oil quantities*. When fillling in the oil, monitor the oil level via the sight glass at the same time.
   The correct oil level is between the upper and lower markings on the glass:

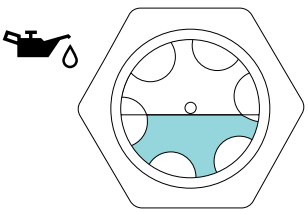

Copyright © (2016) Konecranes. All rights reserved.

4.6.10 Lubricating the kingpin bearings

Bogie steel structure comprises a steel tube at both sides. The kingpin bearings are locating inside the steel tubes. For the lubrication of the bearings, each tube includes four grease nipples in total.

Lubricate the bearings using a lubricant from Group 8: Pumped or central grease lubrication system (page 288)

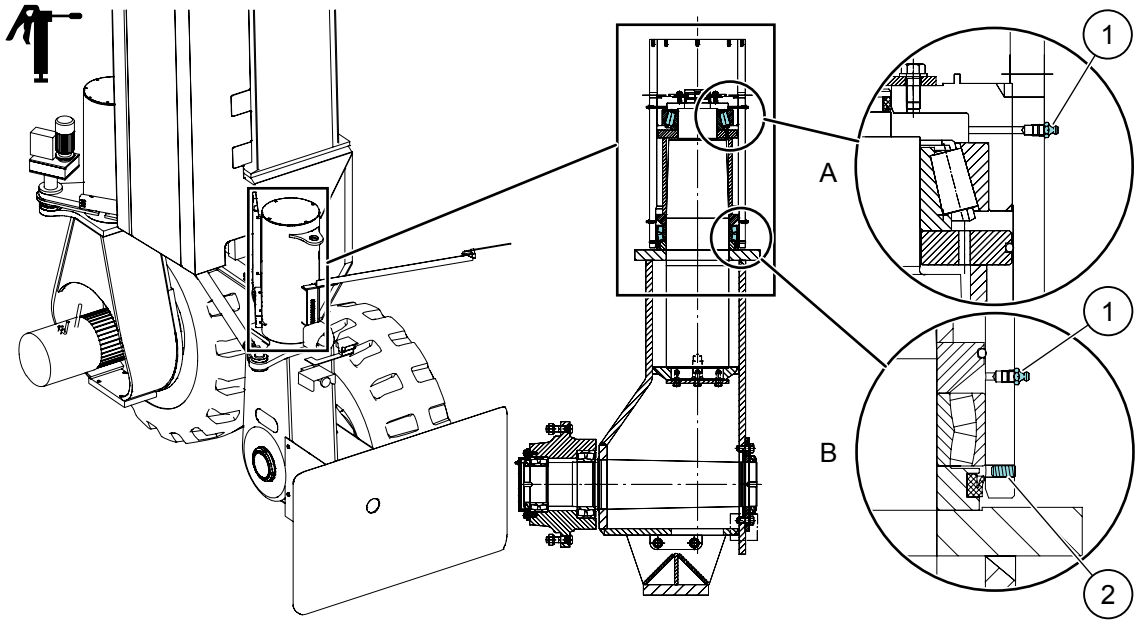

Figure 76. Lubricating the kingpin bearings

1. *Grease nipple*
2. *Set screw*

To lubricate the kingpin bearings at the idle wheel side:

Lubricate the upper thrust bearings:

1. Clean dirt from the upper grease nipples (Det. A, 1).
2. Using a grease gun, lubricate the upper thrust bearings through the upper grease nipples on both sides of the kingpin tube. The total amount of grease is 10 g.
   Wipe away the excessive grease from the grease nipples.

Lubricate the lower thrust bearings:

3. Clean dirt from the lower grease nipples (Det. B, 1).
4. Clean dirt from the set screws (Det. B, 2) on both sides.
5. Loosen set screws and remove them for the duration of lubrication.
6. Using a grease gun, lubricate the lower thrust bearings through the lower grease nipples on both sides of the kingpin tube. The total amount of grease is 10 g.
   The excessive or old grease is pressed out through the set screw threads.
7. Remove and clean excessive grease from and around the grease nipples and the set screw threads.
8. Mount set screws back on their original positions on both sides of the kingpin tube.

NOTICE

MACHINE MALFUNCTION HAZARD

Mount the set screw back to its original position in the thread, otherwise it may damage the inner seal of bearing housing.

Do not screw the set screw more than to its original position.

Copyright © (2016) Konecranes. All rights reserved.

9. Repeat the steps in the driving wheel side of the bogie (the other tube of the bogie steel structure).

4.6.11 Lubricating the wire ropes

⚠ WARNING

MOVING MACHINERY HAZARD

Moving or rotating machinery may cause accidents during the maintenance operations, which could lead to death or severe personal injury.

Make sure that the spreader is not attached to a container and it is in the fully lifted position. Switch off the isolator for machineries and the alternator battery power.

NOTE ***The supervisor should be positioned on the trolley and make sure that all personnel are clear of all moving parts. Only lift or lower the hoists at the command of the supervisor.***

To prevent corrosion and to ensure that the steel wire strands slide smoothly against each other around the sheaves, lubricate all the wire ropes of the crane to their full length:

- Four hoist wire ropes
- Two counterweight wire ropes
- Four skew machinery wire ropes
- Foldable service platform winching wire rope.

Lubricate the wire ropes using a lubricant from Group 8: Pumped or central grease lubrication system (page 288). The greases in this group are suitable for application using a brush. As an alternative, you can use special steel rope lubricating oils. Apply grease with a brush or a spray.

To lubricate hoist ropes:

1. Coat the turns of the two hoist ropes on each rope drum.
2. Coat the suspended lengths of each hoist rope between the machinery platform and the top beam rope sheaves.
3. Coat the suspended lengths of each hoist rope between the top beam rope sheaves and the trolley, and between the trolley and the spreader.
4. Coat the suspended lengths of each hoist rope between the trolley and the load cells on the skew machinery platform.

To lubricate the counterweight ropes:

5. Coat the suspended lengths of each counterweight rope between the machinery platform and the top beam rope sheaves.
6. Coat the suspended lengths of each counterweight rope between the top beam rope sheaves and the trolley, and between the trolley and the counterweights.

To lubricate the skew ropes:

7. Coat the turns of the skew ropes on the skew machinery rope drums.
8. Coat the suspended lengths of each skew rope between the skew machinery rope drums and the load cells.

To lubricate the foldable service platform winching rope:

9. Unfold the service platform and coat the suspended length between the mechanical winch and the service platform.
10. Coat the remaining turns of the winching rope on the winch when the service platform is unfolded.

Copyright © (2016) Konecranes. All rights reserved.

4.6.12 Lubricating the couplings

Lubricating the hoisting machinery motor coupling

⚠ WARNING

MOVING MACHINERY HAZARD

Moving or rotating machinery could cause accidents during the maintenance operations, which could lead to death or severe injury.

Prevent the movements of machinery before you start any maintenance operation.

Before you start the lubrication task, prevent all movements of the machinery:

- Make sure that the trolley is at the normal parking position.
- Make sure that the spreader is resting on the supporting brackets (500 mm) above the ground level (or on top of a container) with the slack ropes.
- Prevent all of the crane drive motors from operating by switching off the power supply to the drives.
- Stop the diesel alternator set and switch off the alternator battery power.

Use new, clean grease from Group 11: Grease-packed couplings (page 290). This is a special lithium-based grease with molybdenum disulphide and extreme pressure (EP) additives.

NOTE ***Do not use the general EP greases from lubricant group 3.***

In order to lubricate the hoisting machinery motor coupling, unmount the motor and brake assembly from the gear reducer. When done with care, unmounting can be performed without disconnecting the cables.

1. Dismantle the coupling:
   1.1 Support the weight of the hoisting motor and brake assembly by using a suitable lifting frame and a chain hoist.
   There is a lifting ring on top of the hoisting motor that can be used for this purpose.
   1.2 Slacken and remove the bolts between the flange of the hoisting motor and the gear reducer.
   1.3 Carefully withdraw the motor outwards until the coupling has separated either from the motor or the gear reducer shaft.
   1.4 Pull off the coupling from the shaft.
2. Inspect and lubricate the coupling:

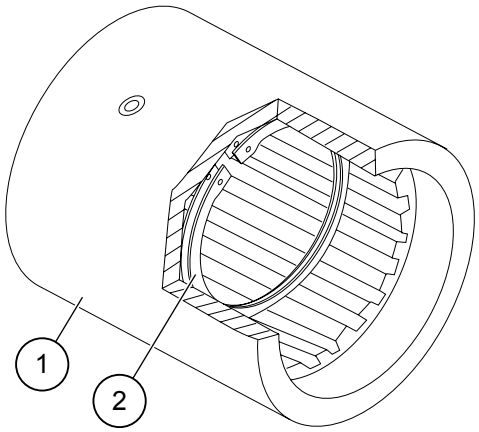

   2.1 Clean the old grease from the gear teeth inside the coupling (1) and from the gear teeth on the motor and gear reducer shafts.

Copyright © (2016) Konecranes. All rights reserved.

2.2 Check that the gear teeth are not damaged or badly worn inside both ends of the coupling or on the shafts.

2.3 Check that both retaining rings (2) are positioned correctly inside the coupling.

2.4 Check that the grease sealing O-rings are in good condition on the motor shaft and on the gear reducer shaft.

NOTE ***If the O-rings are damaged, replace the O-rings as well as the coupling itself.***

2.5 Using a spatula, thoroughly coat the gear teeth inside both ends of the coupling with new grease of the correct type, see Group 11: Grease-packed couplings (page 290).

3. Reassemble the coupling:

3.1 Refit the coupling onto the teeth of the gear reducer primary shaft.

3.2 Carefully align the motor shaft with the coupling, then slide the motor shaft into the coupling. If needed, adjust the motor position slightly before engaging the coupling teeth.

3.3 Attach the motor mounting bolts and tighten them to the correct torque, as specified in the *Appendix III: Tightening torques*.

3.4 Remove the temporary lifting equipment.

Lubricating the skew machinery motor coupling

⚠ WARNING

FALLING OBJECTS HAZARD

Objects accidentally falling from the trolley or gantry could cause death or serious injury to the personnel working or moving under the crane.

Do not allow other persons to walk or drive below the crane during the maintenance work. To prevent unauthorized access, install suitable safety barriers around the ground area below the gantry.

⚠ WARNING

MOVING MACHINERY HAZARD

Moving or rotating machinery could cause accidents during the maintenance operations, which could lead to death or severe personal injury.

Prevent the movements of machinery before you start any maintenance operation.

Before you start the lubrication task, prevent all movements of the machinery:

- Make sure that the trolley is at the normal parking position.
- Ensure that hoist trim and spreader skew are not active. Hoists are not carrying any load, and the spreader is resting on the supporting brackets (500 mm) above the ground level (or on top of a container) with slack ropes.
- Prevent all of the crane drive motors from operating by switching off the power supply to the drives.
- Stop the diesel alternator set and switch off the alternator battery power

Use new, clean grease from Group 11: Grease-packed couplings (page 290). This is a special lithium-based grease with molybdenum disulphide and extreme pressure (EP) additives.

NOTE ***Do not use the general EP greases from lubricant group 3.***

In order to lubricate the skew machinery motor coupling, unmount the motor and brake assembly from the gear reducer. When done with care, unmounting can be performed without disconnecting the cables.

1. Dismantle the coupling:

Copyright © (2016) Konecranes. All rights reserved.

1.1 Support the weight of the motor and brake assembly by using a suitable lifting or supporting equipment.

1.2 Disassemble the pulse encoder from the motor end first.

1.3 Remove the motor fan cover, and slacken and remove the fixing screws between the hoisting motor and the gear reducer.

1.4 Carefully withdraw the motor outwards until the coupling has separated either from the motor or the gear reducer shaft.

1.5 Pull off the coupling from the shaft.

2. Inspect and lubricate the coupling:

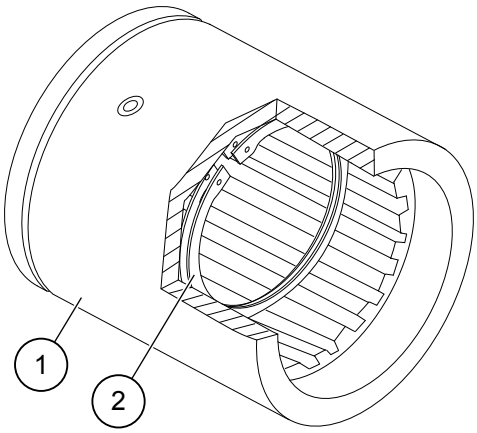

2.1 Clean the old grease from the gear teeth inside the coupling (1) and from the gear teeth on the motor and gear reducer shafts.

2.2 Check that the gear teeth are not damaged or badly worn inside both ends of the coupling or on the shafts.

2.3 Check that the retaining ring (2) is positioned correctly inside the coupling.

2.4 Check that the grease sealing O-rings are in good condition on the motor shaft and on the gear reducer shaft.

NOTE ***If the O-rings are damaged, replace the O-rings as well as the coupling itself.***

2.5 Using a spatula, thoroughly coat the gear teeth inside both ends of the coupling with new grease of the correct type, see Group 11: Grease-packed couplings (page 290).

3. Reassemble the coupling:

3.1 Refit the coupling onto the teeth of the gear reducer primary shaft, making sure that the grooved end is facing the gear reducer.

3.2 Carefully align the motor shaft with the coupling, then slide the motor shaft into the coupling. If needed, adjust the motor position slightly before engaging the coupling teeth.

3.3 Attach the motor fixing screws and tighten them to the correct torque, as specified in the *Appendix III: Tightening torques*.

3.4 Reinstall the motor fan cover and the encoder.

3.5 Remove the temporary motor lifting or supporting equipment.

Copyright © (2016) Konecranes. All rights reserved.

Lubricating the hoist drum coupling

There is a hoist drum coupling in each hoisting machinery unit. Lubricate the hoist drum coupling:

- Regularly, at the interval that is specified in the chapter *Lubrication points for the hoisting machinery unit*
- When a new coupling is fitted
- After a coupling has been dismantled for inspection (always replace the lubricant completely after inspection)

To lubricate the hoist drum coupling:

1. Wipe away any dirt from around the grease nipples (at the opposite sides of the coupling).
2. Using the grease gun, inject a sufficient amount of grease to both upper and lower grease nipples (about 10 g to each nipple). Collect the old grease as it exudes from the drain hole at the rope drum flange.
   Use new grease from Group 11: Grease-packed couplings (page 290). This is a special lithium-based grease with molybdenum disulphide and extreme pressure (EP) additives.
3. Clean off any excess grease from the nipples.

Lubricating the motor couplings on the bogie

⚠ WARNING

MOVING MACHINERY HAZARD

Moving or rotating machinery could cause accidents during the maintenance operations, which could lead to death or severe personal injury.

Prevent the movements of machinery before you start any maintenance operation.

Before you start the lubrication task, prevent all movements of the machinery:

- Prevent all of the crane drive motors and swivel locks from operating by switching off the power supply to the drives
- Stop the main diesel alternator set and switch off the alternator battery power
- To prevent the gantry from moving while mechanically disconnecting the traveling motors and brakes, **insert a wheel chock under each bogie**
- To prevent the bogies from swiveling, lock the bogies into the long (normal) travel mode.

Each gantry traveling motor coupling and swivel lock motor coupling are fully packed with lubricant when the motor is assembled with the gear reducer.

Lubricate the couplings:

- Regularly, at the interval that is specified in the chapter *Lubrication points for the bogie*
- When a new coupling is fitted
- After a coupling has been dismantled and cleaned for inspection.

Lubricating the gantry traveling motor coupling

In order to lubricate each gantry traveling motor coupling, unmount the motor and brake assembly from the gear reducer. When done with care, unmounting can be performed without disconnecting the cables.

1. Dismantle the coupling:
   1.1 Support the weight of the gantry traveling motor and brake assembly by using a suitable lifting frame and a chain hoist.

NOTE ***The lifting frame and service hoist must support the weight of each gantry traveling motor and brake assembly, typically of 140 kg (310 lb).***

Copyright © (2016) Konecranes. All rights reserved.

1.2 Slacken and remove the four bolts between the flange of the gantry traveling motor and the gear reducer.

1.3 Carefully withdraw the motor outwards until the coupling has separated either from the motor or the gear reducer shaft.

1.4 Pull off the coupling from the shaft.

2. Inspect and lubricate the coupling:

2.1 Clean the old grease from the gear teeth inside the coupling and from the gear teeth on the motor and gear reducer shafts.

2.2 Check that the gear teeth are not damaged or badly worn inside both ends of the coupling or on the shafts.

2.3 Check that the retaining ring is positioned correctly inside the coupling.

2.4 Check that the grease sealing O-rings are in good condition on the motor shaft and on the gear reducer shaft.

NOTE ***If the O-rings are damaged, replace the O-rings as well as the coupling itself.***

2.5 Using a spatula, thoroughly coat the gear teeth inside both ends of the coupling with new grease of the correct type, see Group 11: Grease-packed couplings (page 290). This is a special lithium-based grease with molybdenum disulphide and EP additives.

NOTE ***Do not use the general EP greases from lubricant group 3.***

3. Reassemble the coupling:

3.1 Refit the coupling onto the teeth of the gear reducer primary shaft.

3.2 Carefully align the motor shaft with the coupling, then slide the motor shaft into the coupling. If needed, adjust the motor position slightly before engaging the coupling teeth.

3.3 Replace the four motor mounting bolts and tighten them to the correct torque, as specified in the *Appendix III: Tightening torques*.

3.4 Remove the temporary lifting equipment.

Lubricating the swivel lock motor coupling

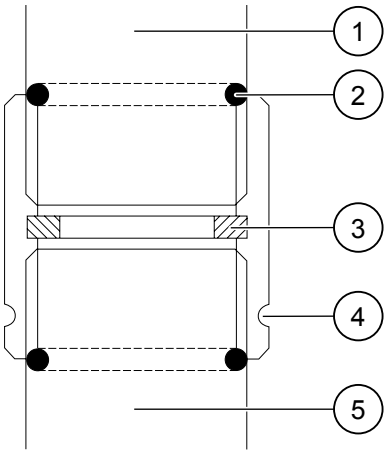

Figure 77. Swivel lock motor coupling assembly

1. *Motor shaft*
2. *O-ring*
3. *Retaining ring*
4. *Groove*
5. *Gear reducer primary shaft*

1. Dismantle the coupling:

Copyright © (2016) Konecranes. All rights reserved.

1.1 Slacken and remove the four bolts between the flange of the swivel lock motor and the gear reducer.

1.2 Carefully withdraw the motor upwards until the coupling has separated either from the motor or gear reducer shaft.
Swivel lock motor can be lifted by hand, but use a suitable rope lashing, to support temporarily the weight of the motor so that no strain is put on the flexible cables.

1.3 Pull off the coupling from the shaft.

2. Inspect and lubricate the coupling:

2.1 Clean the old grease from the gear teeth inside the coupling and from the gear teeth on the motor and gear reducer shafts.

2.2 Check that the gear teeth are not damaged or badly worn inside both ends of the coupling or on the shafts.

2.3 Check that the retaining ring is positioned correctly inside the coupling.

2.4 Check that the grease sealing O-rings are in good condition on the motor shaft and on the gear reducer shaft.

NOTE ***If the O-rings are damaged, replace the O-rings as well as the coupling itself.***

2.5 Using a spatula, thoroughly coat the gear teeth inside both ends of the coupling with new grease of the correct type, see Group 11: Grease-packed couplings (page 290).
This is a special lithium-based grease with molybdenum disulphide and EP additives.

NOTE ***Do not use the general EP greases from lubricant group 3.***

3. Reassemble the coupling:

3.1 Refit the coupling onto the teeth of the gear reducer shaft, making sure that the grooved end is facing the gear reducer.

3.2 Carefully align the motor shaft with the coupling, then slide the motor shaft into the coupling. If needed, adjust the motor position slightly before engaging the coupling teeth.

3.3 Replace the four motor mounting bolts and tighten them to the correct torque, as specified in the *Appendix III: Tightening torques*.

3.4 Remove the temporary rope lashing.

Copyright © (2016) Konecranes. All rights reserved.

Lubricating the trolley traveling machinery motor coupling

⚠ WARNING

FALLING HAZARD

When the maintenance personnel work at the top of the gantry, there is a risk of falling from the heights, which could lead to death or serious personal injury. Persons working on the trolley traveling machinery may not be fully protected by the guardrails or toe plates for general access.

Each person working at the top of the gantry must wear approved personal protective equipment. A safety harness must be attached onto a suitable part of the fixed structure.

⚠ WARNING

FALLING OBJECTS HAZARD

Objects accidentally falling from the trolley or gantry could cause death or serious injury to the personnel working or moving under the crane.

Do not allow other persons to walk or drive below the crane during the maintenance work. To prevent unauthorized access, install suitable safety barriers around the ground area below the gantry.

⚠ WARNING

MOVING MACHINERY HAZARD

Moving or rotating machinery could cause accidents during the maintenance operations, which could lead to death or severe personal injury.

Prevent the movements of machinery before you start any maintenance operation. Disassemble and lubricate only one traveling machinery at a time.

Before you start the lubrication task, prevent all movements of the machinery:

- Make sure that the trolley is at the normal parking position.
- Prevent all of the crane drive motors from operating by switching off the power supply to the drives.
- Stop the diesel alternator set and switch off the alternator battery power

Use new, clean grease from Group 11: Grease-packed couplings (page 290). This is a special lithium-based grease with molybdenum disulphide and extreme pressure (EP) additives.

NOTE ***Do not use the general EP greases from lubricant group 3.***

In order to lubricate the trolley traveling machinery motor coupling, unmount the motor and brake assembly from the gear reducer. When done with care, unmounting can be performed without disconnecting the cables.

NOTE ***One of the traveling machineries has an encoder. Disassemble the encoder first before you remove the motor fan cover.***

NOTE ***Carry out the maintenance task only for one traveling machinery at a time.***

1. Dismantle the coupling:
   1.1 Support the weight of the traveling motor and brake assembly by using a suitable lifting or supporting equipment.
   This is a protective measure to prevent the loose compontents from falling to the ground.

Copyright © (2016) Konecranes. All rights reserved.

1.2 Remove the motor fan cover, and slacken and remove the fixing screws between the hoisting motor and the gear reducer.
If the traveling machinery motor has an encoder, disassemble the encoder first before removing the cover.

1.3 Carefully withdraw the motor outwards until the coupling has separated either from the motor or the gear reducer shaft.

1.4 Pull off the coupling from the shaft.

2. Inspect and lubricate the coupling:

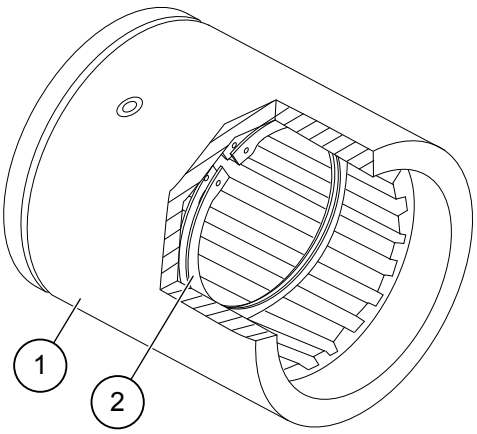

2.1 Clean the old grease from the gear teeth inside the coupling (1) and from the gear teeth on the motor and gear reducer shafts.

2.2 Check that the gear teeth are not damaged or badly worn inside both ends of the coupling or on the shafts.

2.3 Check that the retaining ring (2) is positioned correctly inside the coupling.

2.4 Check that the grease sealing O-rings are in good condition on the motor shaft and on the gear reducer primary shaft.

NOTE ***If the O-rings are damaged, replace the O-rings as well as the coupling itself.***

2.5 Using a spatula, thoroughly coat the gear teeth inside both ends of the coupling with new grease of the correct type, see Group 11: Grease-packed couplings (page 290).

3. Reassemble the coupling:

3.1 Refit the coupling onto the teeth of the gear reducer primary shaft, making sure that the grooved end is facing the gear reducer.

3.2 Carefully align the motor shaft with the coupling, then slide the motor shaft into the coupling. If needed, adjust the motor position slightly before engaging the coupling teeth.

3.3 Reinstall the motor fixing screws and tighten them to the correct torque, as specified in the *Appendix III: Tightening torques*.

3.4 Reinstall the motor fan cover (and the encoder).

3.5 Remove the temporary motor lifting or supporting equipment.

Copyright © (2016) Konecranes. All rights reserved.

4.7 Maintaining the gantry

4.7.1 Gantry maintenance schedule

Table 29. Gantry electrical maintenance schedule

Component	Maintenance task	500 h	1000 h	2000 h	4000 h (1 year)	Other interval/ Notes
Access gates on trolley platform, limit switches	Visual	x				
	Operational				x	
Foldable service platform and ladders, limit switches	Visual	x				
	Operational				x	
Cable ways and cable channels	Visual				x	
Cables	Visual				x	
Cable chain	Visual and operational	x				
Shore power	Visual	x				
	Operational				x	
Floodlights (main girder)	Visual	x				
	Operational				x	
GPS antennas and cable fastenings	Visual	x				

Copyright © (2016) Konecranes. All rights reserved.

Table 30. Gantry mechanical maintenance schedule

Component	Maintenance task	500 h	1000 h	2000 h	4000 h (1 year)	Other interval/ Notes
Counterweight: sheaves, sheave axle, wedge socket, rope fixings, sliding bar, guide rollers, protection fences, fastenings, mechanical limit switch, end buffer	Visual	x				
	Operational. Check also the rotation of the guide rollers.				x	
Sheaves	Visual	x				
	Operational				x	
Walkways, platforms, ladders, guardrail	Visual	x				
Foldable platform and the manual winch	Visual and operational	x				
Crane stickers	Visual				x	Check that the stickers are still readable and properly attached to the crane

Table 31. Gantry lubrication schedule

Component	Maintenance task	500 h	1000 h	2000 h	4000 h (1 year)	Other interval/ Notes
Leg frame: structural joint pins	Grease		x			
Foldable service platform hinges	Oil spray					3000 h
Foldable service platform: winch machinery wire rope	Grease		x			
Cabin door hinges	Grease		x			
Cabin compressor	See the manufacturer's own instructions					

Copyright © (2016) Konecranes. All rights reserved.

Component	Maintenance task	500 h	1000 h	2000 h	4000 h (1 year)	Other interval/ Notes
Cabin condenser	See the manufacturer's own instructions					
Electrical equipment cubicles: door hinges	Oil can or spray				x	
Diesel alternator set: door hinges	Oil can or spray		x			

Table 32. Gantry structural maintenance schedule

Component	Maintenance task	500 h	1000 h	2000 h	4000h (1 year)	Other interval/ Notes
Main girder and flange joints	Visual				x	
	NDT for welds					5 years
	Bolt torque tightening					5 years
Legs and flange joints	Visual				x	
	NDT for welds					5 years
	Bolt torque tightening					5 years
Top beams, flange joints, and sheave supports	Visual				x	
	NDT for welds					5 years
	Bolt torque tightening					5 years
Sill beams and flange joints	Visual				x	
	NDT for welds					5 years
	Bolt torque tightening					5 years
Cabin support	Visual				x	
	Bolt torque tightening					5 years
Cabin protection beams	Visual				x	
	NDT for welds					5 years
	Bolt torque tightening					5 years
Trolley rail	Visual				x	

Copyright © (2016) Konecranes. All rights reserved.

4.7.2 Inspecting rope pulleys

The following inspections concern all rope pulley constructions in the crane.

NOTE ***When you dismantle a pulley, remember to mark the assembly order of the parts for easier reassembly.***

1. Inspect the rope pulley, the cover, and the shaft for possible cracks.
   If cracks are found in the structure, replace the pulley.
2. Inspect the rope pulley groove for wear. If the rope has pressed a clear wound pattern (print) on the pulley (> 0.5 mm) or other side of the groove is worn more than the other, the rope pulley must be replaced.

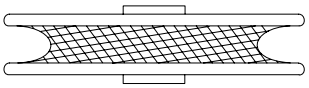	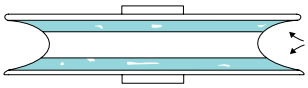	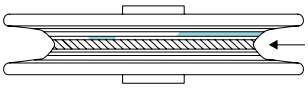
Excessive rope tension	Pulley misalignment	Pulley too large for rope
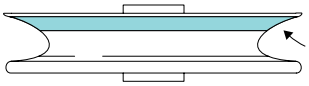	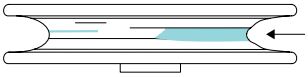	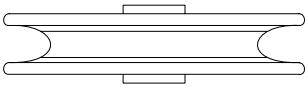
Rope block misalignment	Bearing fault	Normal condition

NOTE ***Rope imprints can also be an indication that the hoist has been utilized beyond its design duty class.***

3. Inspect the rope pulley groove depth wear, for example, with a slide caliper.
4. Carry out lifting and lowering motions with and without load. See if the ropes are vibrating. This can be a sign of worn out rope pulley or bearing.
5. Listen to the operating sound of the rope pulley. There should not be any excessive noise. Squealing noise may indicate bearing fault. The bearings are lifetime lubricated without greasing fittings.

Copyright © (2016) Konecranes. All rights reserved.

4.7.3 Operating the gantry in the maintenance mode

⚠ WARNING

UNEXPECTED CRANE OPERATIONS HAZARD

In the maintenance mode, the collision avoidance detectors (ultrasonic sensors and catwhisker limit switches) are bypassed. Bypassing the collision avoidance detectors could cause unexpected operation of the crane, which could lead to death, severe personal injury, or damage to property.

Do not select the maintenance mode unless you are authorized to perform maintenance operations. Take extra care when operating the crane in the maintenance mode.

Set the maintenance mode ON by pressing the function button on the **Maintenance Mode** page:

In the maintenance mode, you can operate the gantry with the following exceptions:

- All crane movements are performed at slow speed
- Diesel engine runs always at the maximum speed (idle speed is not possible)
- High-wind slowdown and shutdown are bypassed
- Motor overheating is bypassed
- Collision avoidance detectors (ultrasonic sensors, catwhisker limit switches) are bypassed
- Ladder limits are bypassed
- Brake supervision is bypassed
- Sway Control is bypassed
- Auto-steering is not functioning
- You can move the locking pins down even if the bogies are not in the correct alignment (normal, cross, or parking mode).

Copyright © (2016) Konecranes. All rights reserved.

NOTE ***Check also how the maintenance mode affects the trolley and hoist operations, see Operating the trolley in the maintenance mode and Operating the hoisting machinery in the maintenance mode.***

4.8 Maintaining the bogies

4.8.1 Bogie maintenance schedule

Table 33. Bogie electrical maintenance schedule

Component	Maintenance task	500 h	1000 h	2000 h	4000 h (1 year)	Other interval/ Notes
Audible warning beacon	Visual and operational	x				
Catwhisker limit switch	Visual and operational	x				
Collision avoidance sensor	Visual and operational	x				
Gantry camera	Visual and operational	x				
Bogie turning	Operational				x	
Locking pin (swivel lock) device: limit switch	Visual	x				
	Operational				x	
Bogie position (absolute) encoder	Visual	x				
	Operational				x	
Locking pin (swivel lock) motor	See *Maintenance schedule for motors*					
Gantry traveling motor	See *Maintenance schedule for motors*					

Copyright © (2016) Konecranes. All rights reserved.

Table 34. Bogie mechanical maintenance schedule

Component	Maintenance task	500 h	1000 h	2000 h	4000 h (1 year)	Other interval/ Notes
Brake assembly	See *Maintenance schedule for mechanical disc brakes*					
Hub gear reducer (10PS190X8217)	Visual	x				For instructions, see also the manufacturer's manual
	Operational; check the condition of the breather plug				x	For instructions, see also the manufacturer's manual
Locking pin device (swivel lock)	Visual	x				
Locking pin (swivel lock) gear reducer (KM3053-L)	Visual	x				
	Operational				x	
	Inspect gear teeth and bearings					2 years
Locking pin bushings	Visual	x				
Wheel (tire + rim)	Visual	x				
Wheel guard	Visual	x				

Table 35. Bogie lubrication schedule

Component	Maintenance task	500 h	1000 h	2000 h	4000 h (1 year)	Other interval/ Notes
Driving wheel: traveling machinery motor coupling	Inspect, replace coupling grease					16 000 hours
Driving wheel: traveling machinery hub gear reducer	Oil leakage check (check the oil level only if a major leakage)		x			Lubricant: API GL-5 80W-90
	Oil change; check the condition of the breather plug				x	Lubricant: API GL-5 80W-90

Copyright © (2016) Konecranes. All rights reserved.

Component	Maintenance task	500 h	1000 h	2000 h	4000 h (1 year)	Other interval/ Notes
Idle wheel: wheel axle bearings	Grease		x			
Connecting tie rod: bushings	Grease		x			
Kingpin bearings	Grease		x			
Catwhisker limit switch	Oil spray		x			
Locking pin device (swivel lock): motor coupling	Inspect, replace coupling grease					8000 hours
Locking pin device (swivel lock): gear reducer	Replace gear reducer grease					8000 hours
Locking pin device (swivel lock): Locking pin	Grease		x			
Locking pin device (swivel lock): Bushings	Grease		x			

Table 36. Bogie structural maintenance schedule

Component	Maintenance task	500 h	1000 h	2000 h	4000 h (1 year)	Other interval/ Notes
Bogie body	Visual				x	
	NDT for welds					5 years
Wheel support	Visual				x	
	NDT for welds					5 years
	Bolt torque tightening					5 years

Copyright © (2016) Konecranes. All rights reserved.

Component	Maintenance task	500 h	1000 h	2000 h	4000 h (1 year)	Other interval/ Notes
Wheel nuts	Check and tighten wheel nut torque				x	New crane: 1 week / 100 diesel hours After a short period of usage: 1 week / 100 diesel hours from the wheel change
Locking pin device (swivel lock): fixing screws and encoder coupling pin	Visual, tighten the encoder coupling pin if necessary				x	
	Screw torque tightening					5 years

4.8.2 Checking the tire pressure and inflating the tires

DANGER

HIGH PRESSURE HAZARD

Tires may explode while inflating or deflating them. Standing inside the danger zone during a tire explosion will cause death or serious injury.

Inflate and deflate the tires when they are cold. Always stand aside the wheel when deflating or inflating tires, see the deflating danger zone illustration. Use protective eye glasses.

For the safe operation of the crane, all of the gantry tires must be inflated to the correct pressure. Running with under-inflated tires reduces the tracking precision of the gantry travel motion and causes increased tire wear.

Check the tire pressures regularly and reinflate to the correct pressure, if necessary. Do the reinflating when the tires are cold. The pressure will increase when the tires are warm (after gantry travel movements or if heated by the sun).

Table 37. Recommended tire model and air pressure

Tire manufacturer and model	Pressure
Advance: tubeless pneumatic rubber tires 18.00-25 (40 PR)	10 bar (145 PSI)

1. Maintain a safe distance while inflating a tire. The following figure shows the dangerous area around the tires during inflation and deflation.

Copyright © (2016) Konecranes. All rights reserved.

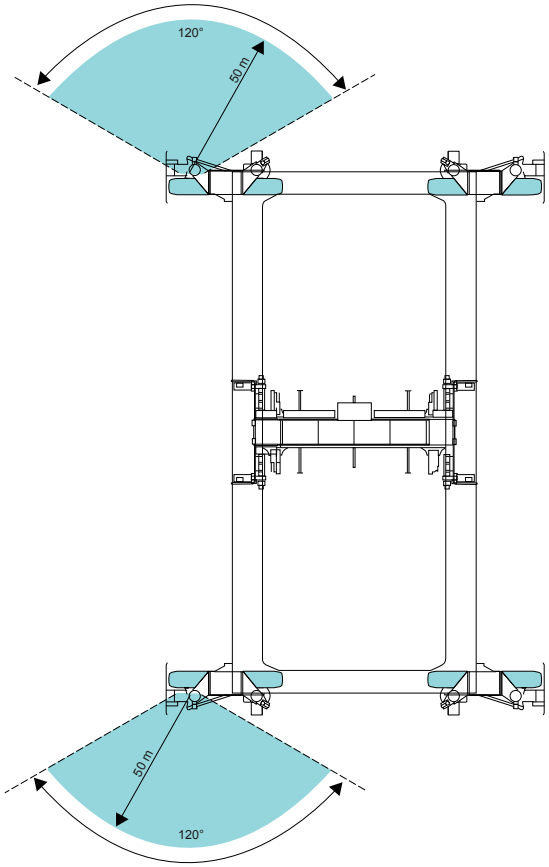

Figure 78. BOXHUNTER deflating and inflating danger zone

2. If necessary, use a safety cage or a restraining device. Do not sit on the tire or lean over it during inflation.

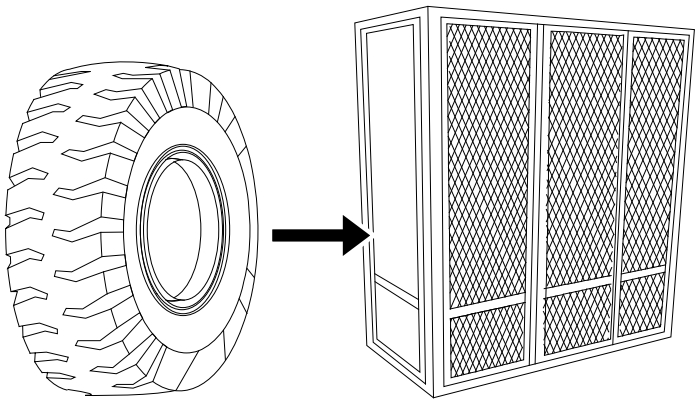

Figure 79. Safety cage

3. When inflating a tire, use an extension hose with an in-line air gauge and a clip-on chuck.

NOTE ***Never inflate beyond 250 kPa to seat the beads. During the seating process, make sure that the automatic air gauge does not exceed this pressure level.***

4. If the seating is improper, deflate and remove the tire and determine the problem.
5. For tube-type tires, inflate the tire to the service pressure and then completely deflate to prevent wrinkles in the tube (secondary inflation).
6. When the beads are properly seated, adjust the inflation to the recommended pressure.
7. Check the pressure after 24 hours following the installation.

Copyright © (2016) Konecranes. All rights reserved.

4.8.3 Tightening the wheel nut torque

Check the wheel nut tightening torque at the intervals specified in the bogie maintenance schedule.

80 % tightening torque	100 % tightening torque
400 N-m	500 N-m

1. Inspect that all the nuts and bolts are clean and undamaged.
2. Oil the threads and the sliding surface between the nut and its washer slightly.
3. Tighten all of the wheel nuts to the 80 % tightening torque, in the order that is presented in the following figure.

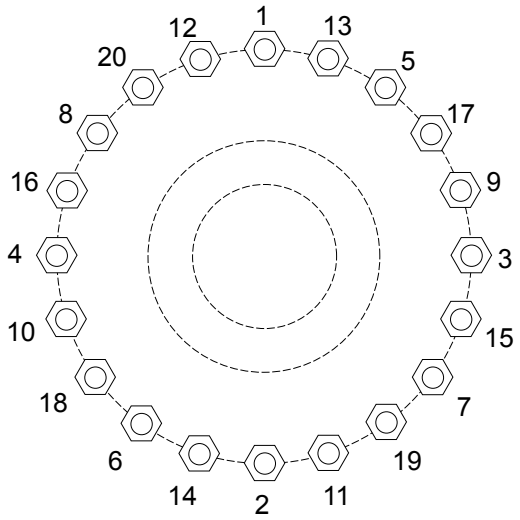

Figure 80. Wheel nut tightening sequence

4. Tighten all of the wheel nuts to the 100% tightening torque, in the same order as in step 3.
5. Verify the correct tightening torque of each wheel nut after a one-day gantry driving at the latest.

4.8.4 Protecting and storing gantry wheels

Storing the wheel rims

Store rims so that they are not exposed to any mechanical, radial stress. It is recommended that rims be stacked on top of each other, separated with a parting board so that they do not come in direct contact with each other.

NOTE ***Store rims with the mounting surface face up.***

Observe the following guidelines:

- If rims are stored outside, make sure that they are covered
- Protect unpainted rims from the effects of changing weather
- When handling painted rims, make sure that the paint coat does not get damaged, as this results in immediate rusting
- Store multi-piece rims in an assembled state
- Move rims on pallets; do not roll them around

Storing the tires

Store tires in dry, cool and dark conditions. Store unmounted tires (tires not installed on rims) in an upright position. Do not allow tires to come into contact with oils, gasoline or any greasy materials.

Copyright © (2016) Konecranes. All rights reserved.

In long-term storage, it is recommended that the load placed on the tires be reduced. It is also recommended that the inflation pressure be reduced to prevent the tire carcass from stretching.

Damage caused by improper handling

The following table lists the damage gantry wheels can suffer if they are improperly handled.

Table 38. Damage to gantry wheels

Improper handling	Resultant damage
Foreign matter between the tire and tube	Tube damage
Use of improper tools	Tube damage
	Cracks in the bead area
	Kinked cable
Improper servicing methods	Cut-off bead-toe
	Folded tube
Uneven rim surface, for example, due to paint or welding	Tube damage
Damaged rims	Problems in the bead region, for example, rim chafing
	Tire slipping on the rim, causing tube damage
Rim being dirty or pitted from corrosion	Bead seating made more difficult
	Tube damage
Improper lubrication	Bead seating made more difficult
Improper bead seating	Vibration resulting from extensive lateral or radial run-out
	Uneven wear pattern
	Damage in the bead region, for example, rim chafing
Neglect of secondary inflation	Tube damage
Overlooking the effects of outside temperature	Sidewall damages resulting from lower than recommended inflation pressures
	Tube damage
Torn-off valve	Improper mounting method
	Rim slippage
	Wrong tube selection, errors in the tube installation

Copyright © (2016) Konecranes. All rights reserved.

4.9 Maintaining the trolley

4.9.1 Trolley maintenance schedule

Table 39. Trolley electrical maintenance schedule

Component	Maintenance task	500 h	1000 h	2000 h	4000 h (1 year)	Other interval/ Notes
Emergency stop	Visual and operational	x				
Magnetic limit switch	Visual	x				
	Operational				x	
Mechanical limit switch	Visual	x				
	Operational				x	
Trolley e-cubicle	Visual	x				
Cubicle service light	Visual and operational	x				
Floodlights	Visual and operational	x				
Camera	Visual and operational	x				
Motor and incremental encoder	See *Maintenance schedule for motors*	x				
Laser detector	Visual	x				
	Operational				x	

Table 40. Trolley mechanical maintenance schedule

Component	Maintenance task	500 h	1000 h	2000 h	4000 h (1 year)	Other interval/ Notes
Gear reducer (QM7E1A-28)	Visual	x				
	Operational				x	
Fastener / torque arm	Visual	x				
Brake assembly	See *Maintenance schedule for mechanical disc brakes*					
End carriage	Visual	x				

Copyright © (2016) Konecranes. All rights reserved.

Component	Maintenance task	500 h	1000 h	2000 h	4000 h (1 year)	Other interval/ Notes
End buffer	Visual	x				
Wheel	Visual	x				
Trolley gate hinges (at both sides of the trolley platform)	Visual	x				

Table 41. Trolley lubrication schedule

Component	Maintenance task	500 h	1000 h	2000 h	4000 h (1 year)	Other interval/ Notes
End carriage: wheel bearings	Grease		x			
Traveling machinery unit: gear reducer	Oil level check	x				See also the manufacturer's instructions
	Oil change				x	
Traveling machinery unit: motor coupling	Inspect, replace coupling grease					16 000 hours
Mechanical limit switch: lever mechanism	Oil spray		x			
Access gates: hinges	Oil spray				x	
Electrical equipment cubicle door hinges	Oil spray				x	
LED floodlights: Swiveling bracket hinges	Oil spray				x	

Copyright © (2016) Konecranes. All rights reserved.

Table 42. Trolley structural maintenance schedule

Component	Maintenance task	500 h	1000 h	2000 h	4000 h (1 year)	Other interval/ Notes
Sheave supports and the trolley frame; flange joints	Visual				x	
	NDT for welds					5 years
	Bolt torque tightening					5 years
Counterweight rope supports	Visual				x	
	NDT for welds					5 years
	Bolt torque tightening					5 years
Trolley traveling machinery torque arm and drive wheel	Visual				x	
	NDT for welds					5 years
	Bolt / screw torque tightening					5 years

Copyright © (2016) Konecranes. All rights reserved.

4.9.2 Operating the trolley in the maintenance mode

⚠ WARNING	
	UNEXPECTED CRANE OPERATIONS HAZARD **In the maintenance mode, all software stop limits are bypassed. Bypassing the safety interlocks could cause unexpected operation of the crane, which could lead to death, severe personal injury, or damage to property.** **Do not select the maintenance mode unless you are authorized to perform maintenance operations. Take extra care when operating the crane in the maintenance mode.**

Set the maintenance mode ON by pressing the function button on the **Maintenance Mode** page:

In the maintenance mode, you can operate the trolley with the following exceptions:

- All crane movements are performed at slow speed
- High-wind slowdown and shutdown are bypassed
- Sway Control is bypassed
- Trolley traverse software stop limits are bypassed
- Traveling motor overheating is bypassed
- Traveling motor circuit breakers are bypassed
- Brake supervision is bypassed
- Spreader twistlock faults are bypassed
- "Cable connected" information of the spreader is bypassed.

Copyright © (2016) Konecranes. All rights reserved.

NOTE ***Check also how the maintenance mode affects the gantry and hoist operations, see Operating the gantry in the maintenance mode and Operating the hoisting machinery in the maintenance mode.***

4.10 Maintaining the hoisting machinery

4.10.1 Hoisting machinery maintenance schedule

Table 43. Hoisting machinery electrical maintenance schedule

Component	Maintenance task	500 h	1000 h	2000 h	4000 h (1 year)	Other interval/ Notes
Hoist rope load cell	Visual	x				
	Operational, calibration				x	
Hoist speed measurement unit / incremental encoder	Visual	x				
	Operational				x	See also the manufacturer's maintenance instructions for the frequency converter.
Hoist position encoder	Visual	x				
	Operational				x	
Overload protection	Operational				x	
Hoisting motor	See *Maintenance schedule for motors*					

Copyright © (2016) Konecranes. All rights reserved.

Table 44. Hoisting machinery mechanical maintenance schedule

Component	Maintenance task	500 h	1000 h	2000 h	4000 h (1 year)	Other interval/ Notes
Gear reducer (LSC22802HYX901 -28)	Visual	x				
	Inspect the gear teeth and bearings through the inspection cover				x	
	Check and replace the dessicant breather when necessary. Replace the breather when changing the the gear oil.					Desiccant breather must be replaced when the color of the indicator granules in the air filter changes from ruby-red (= active) to light orange (= replace). See also the manufacturer's own instructions
Brake assembly	See *Maintenance schedule for mechanical disc brakes*					
Drum coupling	Visual	x				
Rope drum	Visual and measurement, see *Inspecting rope drums*	x				
Rope clamps	Visual	x				
	Check bolt torque tightening				x	
Pressure rollers	Visual; adjust if necessary	x				
Motor coupling	Inspect when replacing the coupling grease					6000 h

Copyright © (2016) Konecranes. All rights reserved.

Table 45. Hoisting machinery lubrication schedule

Component	Maintenance task	500 h	1000 h	2000 h	4000 h (1 year)	Other interval/ Notes
Gear reducer	Visual	x				
	Oil change; replace also the desiccant breather when changing the oil				x	
Motor coupling	Replace grease					6000 h
Drum bearing	Grease		x			
Drum coupling	Grease		x			
Pressure roller mechanism	Oil spray		x			

Table 46. Hoisting machinery structural maintenance schedule

Component	Maintenance task	500 h	1000 h	2000 h	4000 h (1 year)	Other interval/ Notes
Hoisting machinery mountings	Visual				x	
	NDT for welds					5 years
	Check bolt torque tightening					5 years
Gear reducer mountings	Visual				x	
	NDT for welds					5 years
	Check bolt torque tightening					5 years

Copyright © (2016) Konecranes. All rights reserved.

4.10.2 Inspecting rope drums

Inspect the rope drums of the hoisting machinery units and of the skew machinery.

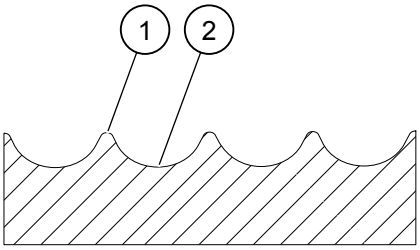

Figure 81. Inspecting a rope drum

1. *Groove crest*
2. *Groove bottom*

1. Inspect the rope drum groove crests for wear:

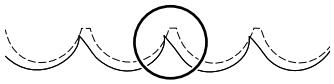

Healthy grooves are smooth and do not have inclined edges. In case of doubt, unwind some more rope from the drum and compare the used grooves with unused grooves.

2. Inspect the rope drum groove depth for wear:

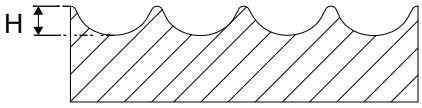

Measure the groove depth (H) from the groove bottom to the top of the groove crest. Compare the used grooves with the unused grooves. If there are significant differences in the groove depths in the rope drum, replace the drum.

3. Inspect the rope drum groove pitch for wear.

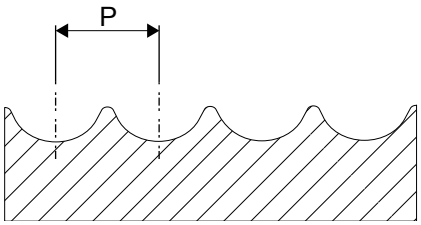

Measure the groove pitch (P) in the used grooves and in the unused grooves. If there are significant differences in the groove pitch measurements, replace the rope drum.

4. Inspect the rope clamps for wear.
   If the inspection of rope clamps reveals any corrosion, excessive wear, dents, cracks, or other damage, replace the rope clamps. Examine also the threaded holes in the rope drum for wear.
5. Inspect the pressure rollers (in the rope drums of hoisting machinery units) for wear.
   Check the pressure rollers visually for possible damage. Monitor their operation in lifting and lowering motions, and ensure that the rollers turn freely.

Copyright © (2016) Konecranes. All rights reserved.

4.10.3 Operating the hoisting machinery in the maintenance mode

⚠ WARNING	
	UNEXPECTED CRANE OPERATIONS HAZARD **In the maintenance mode, all software stop limits are bypassed. Bypassing the safety interlocks could cause unexpected operation of the crane, which could lead to death, severe personal injury, or damage to property.** **Do not select the maintenance mode unless you are authorized to perform maintenance operations. Take extra care when operating the crane in the maintenance mode.**

Set the maintenance mode ON by pressing the function button on the **Maintenance Mode** page:

In the maintenance mode, you can operate the hoisting machinery units with the following exceptions:

- All crane movements are performed at slow speed
- Hoisting machinery and skew machinery software stop limits are bypassed
- Slack rope detection is bypassed
- Hoist synchronization is disabled
- Spreader interlocks are bypassed
- Hoisting machinery and skew machinery motor overheating faults are bypassed
- Hoist trim is not functioning
- Lifting and lowering is possible even if the bogies are not in the long travel or parking mode
- You can operate a single hoist at a time, see *Operating a single hoist in the maintenance mode*.

NOTE ***Check also how the maintenance mode affects the gantry and trolley operations, see Operating the gantry in the maintenance mode and Operating the trolley in the maintenance mode.***

Copyright © (2016) Konecranes. All rights reserved.

NOTE ***You cannot bypass the hoisting machinery brake supervision in the maintenance mode.***

4.10.4 Operating a single hoist in the maintenance mode

⚠ WARNING

UNEXPECTED CRANE OPERATIONS HAZARD

In the maintenance mode, all software stop limits are bypassed. Bypassing the safety interlocks could cause unexpected operation of the crane, which could lead to death, severe personal injury, or damage to property.

Do not select the maintenance mode unless you are authorized to perform maintenance operations. Take extra care when operating the crane in the maintenance mode.

In the maintenance mode, you can operate one hoist at a time at slow speed. This is required, for example, when changing wire ropes, or when replacing an absolute encoder and calibrating the hoist position measurement.

To operate a single hoist in the maintenance mode:

1. Set the crane into the maintenance mode from the electrical cubicle or by pressing the function button on the **Maintenance Mode** page of the operator panel.
   When you set the maintenance mode ON from the operator panel, you must be logged in as a service-level user (a 4-digit passcode required).
   When the maintenace mode is set active, the operator panel shows the following event in the **Diagnostics** page:

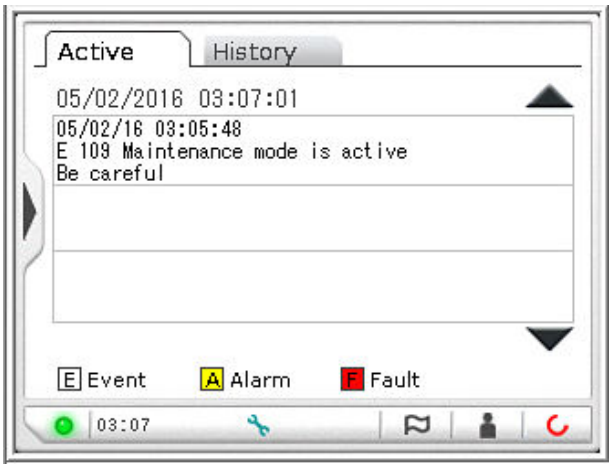

2. To select a single hoist to operation, deflect and hold the right joystick on the controller to the left or right:
   - Left = Hoist A1 and the left end of the spreader
   - Right = Hoist A2 and the right end of the spreader
3. To lift the selected hoist, deflect the joystick backwards.
4. To lower the selected hoist, deflect the joystick forwards.
5. To return both hoists to the normal operation, return the joystick to the central position.

NOTE ***Before returning the crane to the normal operation mode, check from the Hoist Limits page of the operator panel that the hoist position difference calculated between the two absolute encoders is less than 18 cm. If the difference is >20 cm, it generates a fault that prevents the crane operation. The fault condition is cleared when the position difference is <18 cm.***

Copyright © (2016) Konecranes. All rights reserved.

4.11 Maintaining the wire ropes

4.11.1 Wire rope inspection and maintenance schedule

Table 47. Wire rope mechanical maintenance schedule

Component	Maintenance task	500 h	1000 h	2000 h	4000 h (1 year)	Other interval/ Notes
Wire rope (hoist)	Visual	x				
	Measure rope diameter		x			
Wire rope (counterweight)	Visual	x				
	Measure rope diameter		x			
Wire rope (skew)	Visual	x				
	Measure rope diameter		x			
Winching rope (foldable service platform)	Visual	x				
Winch (foldable service platform)	Operational	x				
Wedge socket	Visual	x				
Rope end clamps	Visual	x				
	Check bolt torque tightening				x	

Table 48. Wire rope lubrication schedule

Component	Maintenance task	500 h	1000 h	2000 h	4000 h (1 year)	Other interval/ Notes
Wire ropes (all)	Grease		x			

Copyright © (2016) Konecranes. All rights reserved.

4.11.2 Wire rope technical data

Konecranes uses its own designation system for the wire ropes. It differs slightly from the system described in the standards. Konecranes designation system is shown in the following figure.

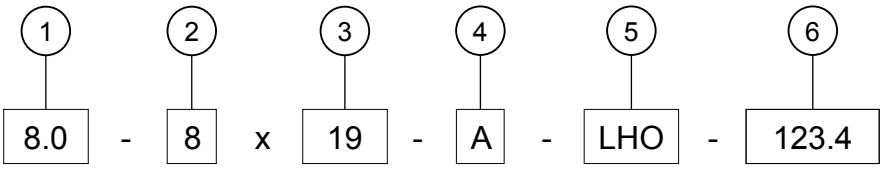

Figure 82. Rope designation used by Konecranes

1. *Diameter (mm)*
2. *Number of strands*
3. *Number of wires in a strand, R - Rotation resistant*
4. *Surface treatment*
5. *Direction of lay*
6. *MBL (minimum breaking load, in kN)*

For normal ropes, the number of strands is the number of outer strands. For rotation-resistant ropes, the number of strands is the total number of all strands. Instead of the wire tensile grade, Konecranes' designation tells the rope's minimum breaking load.

The following table presents the general technical data for the BOXHUNTER RTG hoist ropes, skew ropes, and counterweight ropes.

Table 49. Hoist rope information

Quantity	Rope type (galvanized)	Minimum breaking load	Diameter	Length
2	18-6x36-A-LHO-226	226 kN	18.0 mm	140 m
2	18-6x36-A-RHO-226	226 kN	18.0 mm	140 m

Table 50. Counterweight rope information

Quantity	Rope type (galvanized)	Minimum breaking load	Diameter	Length
1	18-6x36-A-LHO-226	226 kN	18.0 mm	130 m
1	18-6x36-A-RHO-226	226 kN	18.0 mm	130 m

Table 51. Skew rope information

Quantity	Rope type (rotation resistant, galvanized)	Minimum breaking load	Diameter	Length
2 (1 per rope drum)	18-35x7R-A-RHO-229	229 kN	18.0 mm	6.5 m

Copyright © (2016) Konecranes. All rights reserved.

Table 52. Rope clamp information

Quantity per rope drum	Description	Clamp	Screw size, type	Torque
5	Hoist rope clamp on rope drum	D2798-4	DIN 931 M16x50 8.8	195 Nm
5	Counterweight clamp on rope drum flange	SM08D10	DIN 912 M10x40 A2-80	43 Nm
9	Skew rope clamp on skew rope drum	SM08D10	DIN 912 M10x40 A2-80	43 Nm

For an overview of the BOXHUNTER rope reeving, see Rope reeving system (page 54).

4.11.3 Wire rope inspections

⚠ WARNING

MOVING MACHINERY HAZARD

Moving or rotating machinery could cause accidents during the wire rope inspection, which could cause death or serious injury.

To prevent all machinery movements, switch off the machinery isolation switch.

⚠ WARNING

FALLING LOAD HAZARD

Corroded, damaged, or worn wire rope that does not meet the ISO 4309 acceptance criteria could break during operation and cause the load to fall. This could cause death or serious injury.

Continued operation of the crane is forbidden until the ropes have been replaced.

NOTE ***Examination and discard of wire ropes for cranes is specified in ISO Standard 4309. This code of practice applies always and takes precedence over any other inspection and discard procedure.***

Report and act upon any defects that are found during the routine inspections. The rope replacement criteria are specified in ISO 4309 and are summarized in *Rope replacement criteria*.

Structure of wire ropes

The following figure shows the structure of the wire rope:

Copyright © (2016) Konecranes. All rights reserved.

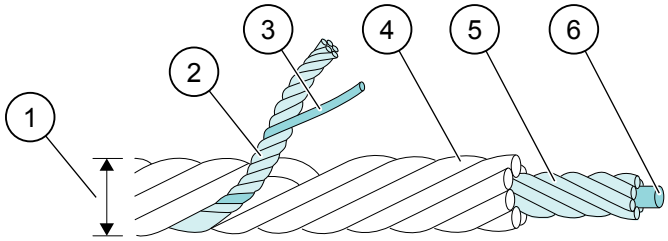

Figure 83. Wire rope structure

1. *Rope*
2. *Strand*
3. *Wire*
4. *Outer strand layer*
5. *Inner strand layer*
6. *Core*

Inspecting the wire ropes visually

Before starting the wire rope inspection, lower the spreader so that it is resting on suitable blocks of wood, on ground level, and with the wire ropes slack.

1. Inspect the full length of each wire rope visually for any corrosion or deformation damage.
2. Inspect each wire rope for corrosion or broken strands at the clamp positions onto its rope drum.
3. Inspect the ends of each wire rope for corrosion or damaged strands at the end fitting positions.

Copyright © (2016) Konecranes. All rights reserved.

Measuring the wire rope diameter

This rope diameter measurement task applies to both hoist and auxiliary ropes.

The diameter measurements must be made at several positions along the length of the ropes. The highest wear rates are likely to be on the parts of the ropes which pass most frequently around the sheaves and onto the rope drums.

Table 53. Diameter measurement positions

Diameter check position	Height above ground of empty spreader
Diameter of each hoist rope at the position near to its rope drum	Just above the ground level (with the wire ropes in tension)
	At mid height
	Suspended at the fully-lifted position
Diameter of each counterweight rope at the position near to its rope drum	Just above the ground level (with the wire ropes in tension)
	At mid height
	Suspended at the fully-lifted position
Diameter of each skew rope very near to its skew machinery rope drum	With +/- 5 degrees skew angle.

To reach different positions along the ropes without the need for an access platform, you can lift the spreader to various heights.

For a laid rope, the diameter is defined as an imaginary circle around the outside of all of the cores. The following figure shows the wrong and correct diameter measurement:

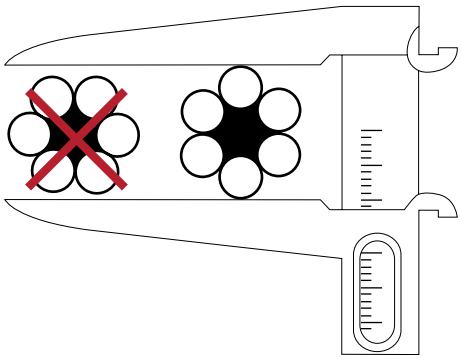

To measure the wire rope diameter:

1. Measure the rope diameter at several positions along the length of the ropes.
2. Repeat the measurement at each selected position, across each of the three alternative pairs of strands. Use the average of these three readings in determining the correct rope diameter.

Checking the clamp tightness

Tightness of the clamps that attach each hoist rope onto the corresponding drum must be checked for each wire rope.

1. Check the tightness of the clamps on the hoist rope drum and skew rope drum.

Copyright © (2016) Konecranes. All rights reserved.

2. Apply the correct bolt tightening torque to all of these clamps using a suitable torque wrench.
   For information on the tightening torques, see *Wire rope technical data*.

Rope replacement criteria

Broken wires

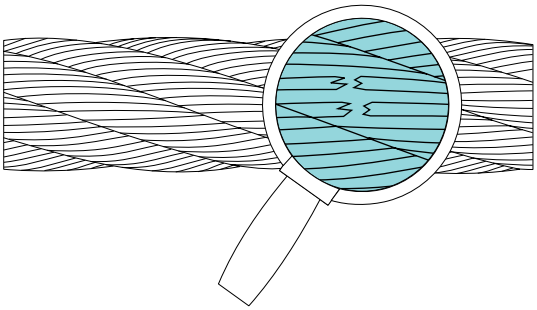

Figure 84. Rope with broken wire

A wire rope with round strands is permitted to have a number of broken wires, before the rope must be discarded.

Table 54. ISO 4309 rope replacement criteria

Maximum number of broken wires over length	
6 x diameter	**30 x diameter**
14	29

NOTE ***Wires in the steel core are not classed as load bearing and must be excluded from this assessment.***

External wear

The outside diameter of a wire rope can be reduced by wear as it passes around the pulleys or over plain guides. Check the diameter over any part of the length where such abrasion can occur.

If the diameter is reduced by 7% or more, the rope must be discarded. This applies, even if none of the wires are broken.

Local decrease in elasticity

The maximum stresses in a wire rope usually occur close to the end fittings, where the strands are prevented from moving relative to each other. Therefore, always take the rope diameter measurements near to the end fittings.

If the diameter is reduced by 7% or more, the rope must be discarded. This applies, even if none of the wires are broken.

Corrosion

If a wire rope is corroded, the extent of the damage and the reduction in the breaking strength cannot be easily determined. When any wire rope shows visible signs of corrosion, a competent person must inspect it.

Copyright © (2016) Konecranes. All rights reserved.

Rope deformation

There are several types of rope deformation. When a deformation is found, a competent person must evaluate the extent of the damage and defective ropes must be replaced, before the crane is used again.

Table 55. Rope deformations

Type of deformation	Example
Waviness To measure the waviness, lay the rope along a flat surface and measure the maximum height 'x' of the top strands of the rope above the surface. If x > 4d/3, where "d" is the rope diameter, discard the rope.	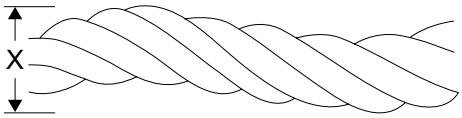
Basket or lantern distortion Discard a rope with basket or lantern distortion.	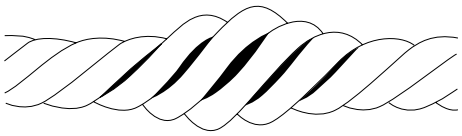
Strand or wire extrusion Discard a rope with strand or wire extrusion.	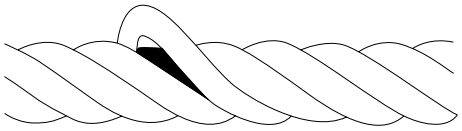
Local increase in diameter Local increase in diameter can be caused by a failure of the internal core. If the deformation is severe, discard the rope.	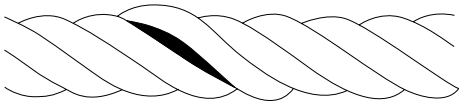
Local decrease in diameter Local decrease in diameter can be caused by a disintegration of the internal core. If the deformation is severe, discard the rope.	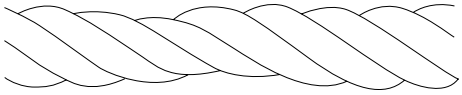
Flattened portions Flattened portions are usually caused by mechanical damage from impact or jamming. If the deformation is severe, discard the rope.	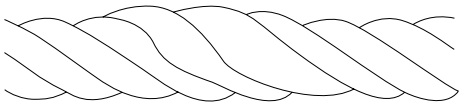
Kinks or tightened loops Discard a rope with a kink or tightened loop.	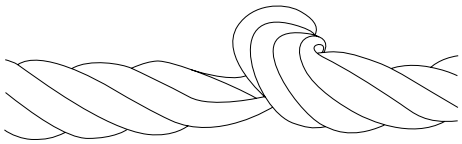
Severe bends Severe bends are usually caused by external influence. Discard the rope.	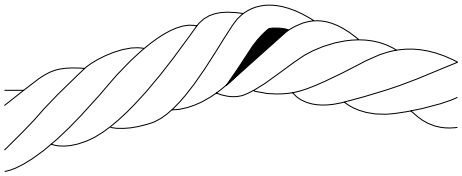

Copyright © (2016) Konecranes. All rights reserved.

4.11.4 Changing the wire ropes

The following illustration shows the rope reeving of the BOXHUNTER crane. The two sets of hoist ropes and the counterweight ropes are presented with different colors. The same color coding is used in the close-ups of the rope installations.

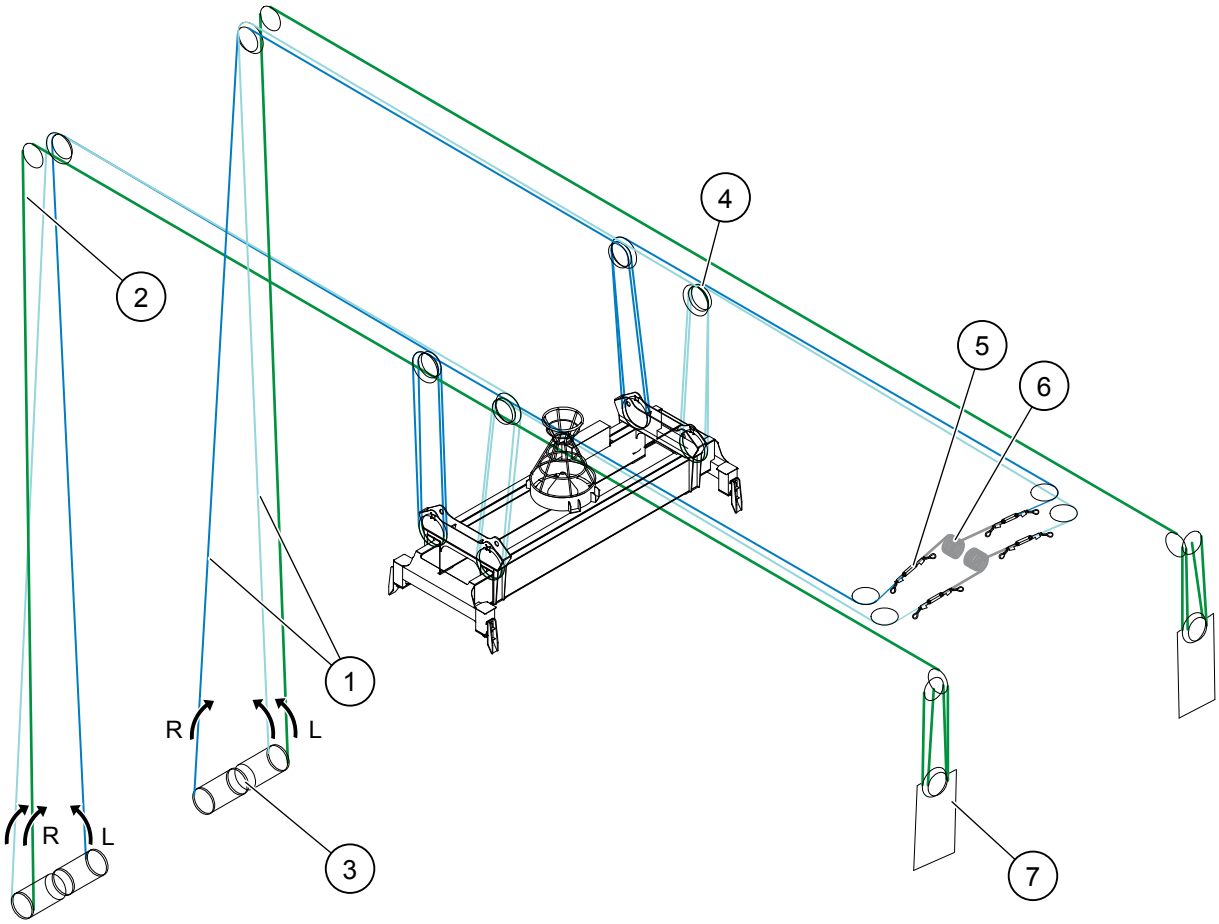

Figure 85. BOXHUNTER rope reeving

1. *Hoist wire ropes*
2. *Counterweight wire rope*
3. *Hoisting machinery rope drum*
4. *Hoist sheave*
5. *Load cell*
6. *Skew machinery wire rope*
7. *Counterweight*

Tools and equipment required for rope changing

Table 56. Rope changing tools and equipment

Tool or equipment	Description
Motor-driven reeving winch	
Axle stand with holding brake	
Auxiliary reeving sheaves (x4) mounted on the sheave brackets at the skew platform.	Suitable for D18 wire ropes.

Copyright © (2016) Konecranes. All rights reserved.

Tool or equipment	Description
180 m x D10 lightweight auxiliary rope (x3), for example, sailing rope (MBL 10kN)	These auxiliary lightweight ropes can be pulled by hand up to the skew platform for reeving.
Ratchet hand winches (x2) Min. SWL = 100 kg (220 lb)	These hand winches are used to hold and adjust the position of the hoist ropes.
30 m x D10 lightweight auxiliary ropes (x4), for example, sailing rope (MBL 10kN)	These short, lightweight ropes are used as a temporary holding for the hoist ropes.
Rope grips 20-DIN741 HDG (x12)	These are used to clamp the temporary holding ropes onto the hoist ropes.
Single eye cable grip D10-D20 x 400 (x4)	These are used to make an eye loop at the end of rope.
500-mm high support for the spreader 300-mm high extension piece	

Procurement of wire ropes

Always replace all four hoist ropes

The wire ropes on a crane must always be replaced as a complete set of four new ropes. The stretch characteristics of the new ropes are not the same as the old ones that have been in use on the crane for time. This applies, even if the new rope is supplied from the same original drum as the old rope.

NOTE ***Never replace just one hoist rope, even if only one rope is damaged. Counterweight ropes can be changed one by one, as they are independent of each other.***

Rope type and strength

Technical data for the original ropes is defined in Wire rope technical data (page 197). The specification for the replacement ropes should match these data.

Copyright © (2016) Konecranes. All rights reserved.

Rope matching

As defined in the data table, two of the hoist ropes have their closing lay in the right-hand direction and the other two ropes have their closing lay in the opposite left-hand direction. This is important for the smooth winding of the ropes into the opposite 'handed' helical grooves of the hoist drums.

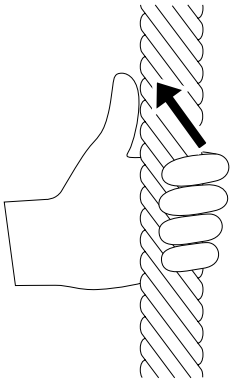

Figure 86. Left-hand lay of strands in the rope

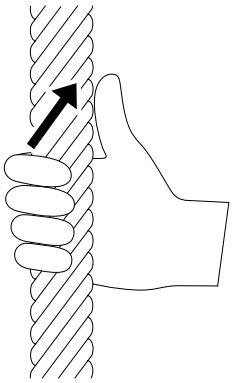

Figure 87. Right-hand lay of strands in the rope

When a new rope is required, these two different types of ropes should be purchased at the same time as matched ropes.

It is important that the two different lays of rope are made to the same specification because this also affects their stretch characteristics. Hence, the ropes must be the same size and tensile grade.

Copyright © (2016) Konecranes. All rights reserved.

Hoist and counterweight rope lays

The following figure shows the correct order of lays for the hoist and counterweight wire ropes. Right-hand lay is presented by letter 'R' and left-hand lay by letter 'L'.

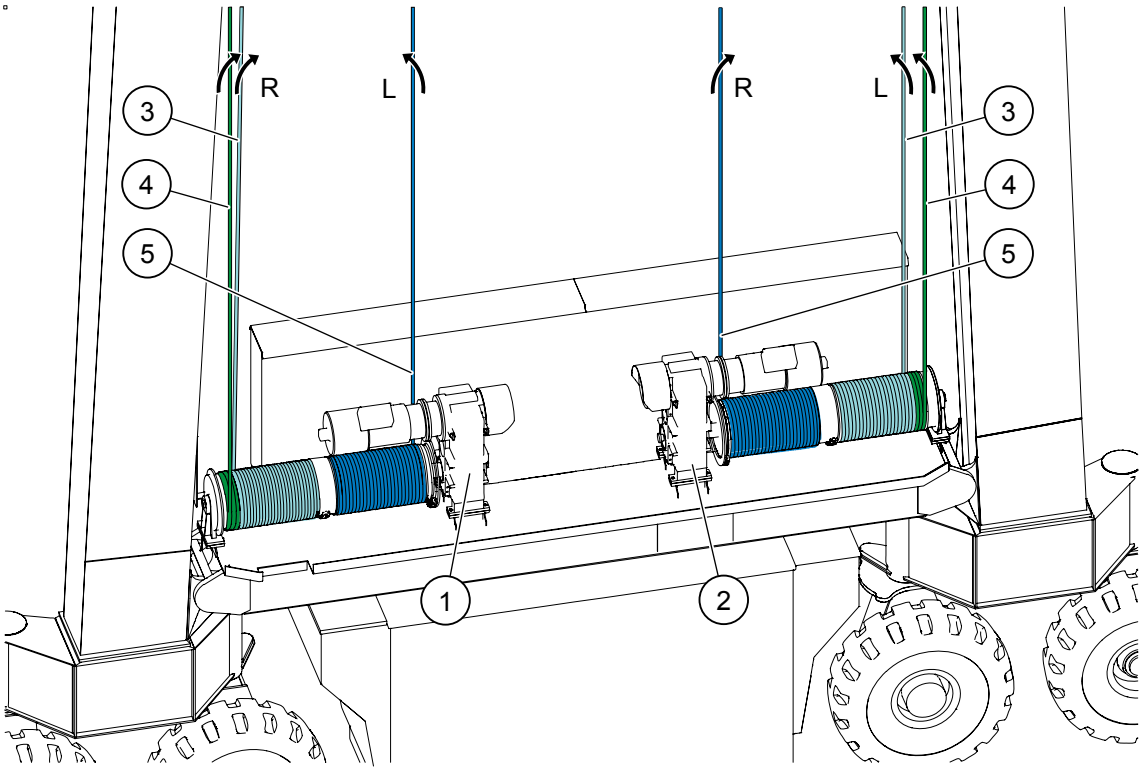

Figure 88. Order of rope lays in BOXHUNTER

1. *Hoisting machinery A1*
2. *Hoisting machinery A2*
3. *Hoist rope*
4. *Counterweight rope*
5. *Hoist rope*

For more information, see Rope reeving system (page 54).

Preparing the wire rope

Mount the transportation reels

1. Before taking a new wire rope off from a reel, always mount the reel on an axle which allows the free rotation of the reel.
   This can be either a horizontal bar mounted between two axle stands, or a special capstan with a vertical axis. The reel then rotates to allow the rope to be pulled off, without causing twists or kinks in the rope. Whenever the rope is put back onto a reel, always rotate the reel to coil the rope, without introducing twists or kinks into the rope.

Copyright © (2016) Konecranes. All rights reserved.

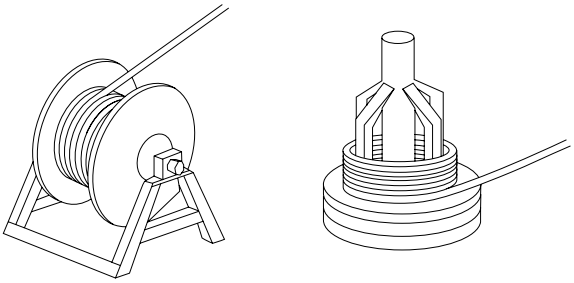

Figure 89. Transportation reels for wire rope

NOTE ***Never uncoil a wire rope from a stationary reel or coil it onto a stationary reel.***

Cut the ropes to length

2. If possible, get wire ropes that are pre-cut to the correct length. If not possible to have pre-cut ropes, then cut each rope to the correct length before installing on the crane. For information on the correct rope lengths, see *Wire rope technical data*.

NOTE ***Write down the lengths and other details of the ropes. The information can be used the next time the ropes need changing.***

3. From an axle-mounted reel, unwind the correct length of the rope and support it on rollers or blocks of wood that are placed at regular intervals along a clean level surface.

NOTE ***Do not drag the rope along an abrasive surface, such as concrete pavement or ground surface.***

4. Make two bindings around the rope, at either side of the position where the rope is to be cut. Use bright steel wire for the bindings. To prevent the new ends from fraying, apply the bindings to the rope before it is cut.
   The figure shows the bindings around the rope and the correct place for cutting the wire.

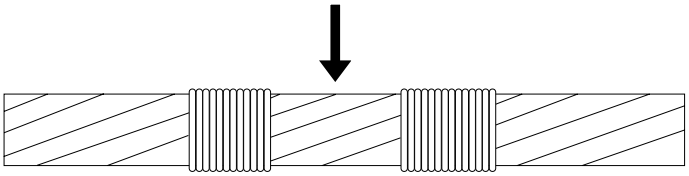

5. To ensure a clean cut, cut the rope using a purpose-designed guillotine. If a guillotine is not available, add extra temporary bindings at the position of the cut, before any sawing. This supports the individual wires, and prevents the ends from splaying.
6. After cutting, attach any permanent fitting to one end of the rope, using the correct procedure.

Rewind the wire onto an empty reel

7. Before installing the rope on the crane, wound the rope back onto the reel.
8. Clamp the end with any permanent fitting securely onto the reel first. If there are no fittings on either end, clamp one end of the new rope securely onto the empty reel first (that is, before the rope is wound onto the reel).
9. Wind the rope onto the reel, so that the outer free end has no fitting. Secure this end so that the turns cannot become loose during transportation.

Fit the cable grips

10. Fit a special, single-end cable grip (pulling sock) onto the end of wire ropes for reeving. The cable grip consists of a length of steel braid, which is fitted over the end of the wire rope. The cable grips can also be easily reeved around the sheaves.
11. To hold the end of the braid against the wire rope, make a temporary binding around the open end of the braid. When pulling the loop on the other end of the cable grip, the braid tightens around the wire rope and forms a secure attachment.

Copyright © (2016) Konecranes. All rights reserved.

The figure shows the correct place for the temporary binding.

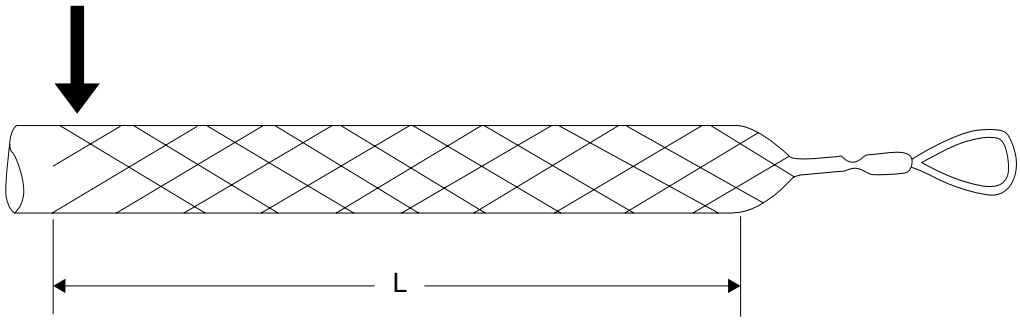

12. In order to reach the correct tightening, match the size of the cable grip to the diameter of the wire rope. The cable grip attachment length "L" must not be less than the minimum specified by the cable grip manufacturer.
13. When the pulling tension is released from the loop, you can take off the cable grip from the end of the wire rope. First remove the temporary binding and then slide the braid off the wire rope.

Assembling wedged head fittings

Wedged head fittings are used on the ends of wire ropes in situations where the assembly has to be made after the rope is threaded around the sheaves.

If the length of the rope needs adjusting, the fitting can also be released from the rope at any time.

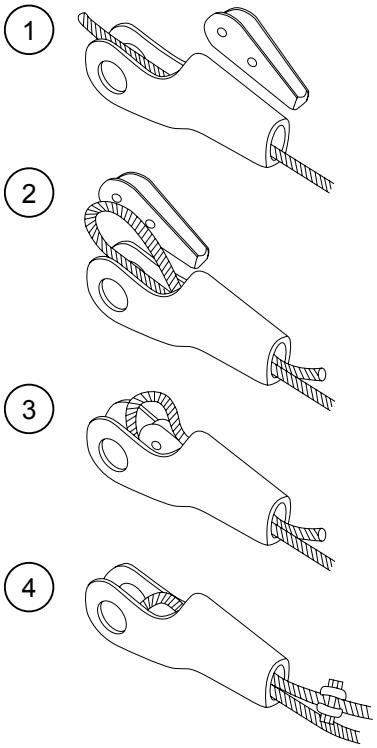

Figure 90. Wedged head fitting assembly

1. Thread the free end of the new wire rope up through the wedged head fitting (1).
2. Loop the free end of the new wire rope around the loose wedge and back through the wedged head fitting (2).
   The loaded part of the wire rope must be at the correct side of the fitting, with its axis aligned with the holes for the clevis pin.

Copyright © (2016) Konecranes. All rights reserved.

3. Pull both parts of the rope until the wedge is tightly seated into the fitting (3).
4. Fit the rope grip onto the free end of the rope (4) and tighten its U-bolt equally at both sides to the correct torque.

NOTE ***Do not attach the rope grip to the loaded part of the rope in any way.***

Adjusting the wedged head fitting

5. Remove the grip from the free end of the wire rope.
6. To release the wedge, push the wire rope into the fitting.
7. Adjust the loop by moving the free end of the rope relative to the main part.
8. Pull the loop and the wedge back into the fitting, until the assembly becomes tight again.
9. Refit the grip onto the free end of the wire rope.

Preparations before the rope installation

⚠ WARNING

MOVING MACHINERY HAZARD

Rope change or adjustment requires that the electrical power is available to the hoisting machinery. Moving or rotating machinery could cause accidents during the wire rope change.

To avoid any unexpected movements of the crane, switch off or isolate the gantry and trolley traveling motors, so that they are prevented from running.

⚠ WARNING

FALLING LOAD HAZARD

While removing or installing the ropes, there is a risk of a wire rope slipping and falling to the ground. Falling wire rope could cause severe injury or death.

Minimum of two persons are required to handle the rope change operation.

⚠ WARNING

FALLING HAZARD

While working at heights, there is a risk of falling off the machinery. Falling from heights could cause severe injury or death.

Use approved fall protection equipment and a manlift. If you must access the main girder, take the appropriate fall protection and safety precautions (see the following list).

Before the wire rope installation, do the following preparatory tasks:

- Park the trolley to the access-side end of the main girders.
- Position the spreader under the trolley, 0.5 m above the ground level.
- Raise the counterweight on its track 0.3 m above the buffer end stops using a suitable distance block between the counterweight and the buffer end stops.
- Place the transportation reels for the wire rope on a stand, next to the sill beam at the access-side. Make sure that the rope reels are able to rotate freely.
- Install the skew ropes first in the center position.
- To reeve the hoist wire rope through the sheaves, use a temporary lightweight rope (for example, a sailing rope, D10, MBL 10 kN). If possible, place the hoist ropes as a pair on the same machinery. In this case, you need 2 x 150 m temporary supporting rope.

Copyright © (2016) Konecranes. All rights reserved.

- Attach another lightweight rope at the end of the hoist rope, that is, 2 x ~30 m.
- Use a manlift to reach sheaves on the top beams and on the trolley while installing the temporary lightweight ropes.
- Wear approved eye protection.
- Do not access the main girder, unless it is an emergency. If you must move on the main girder, use approved fall protection and attach the safety harness with a lanyard belt to the safety wire (running along the main girder, between the machinery and access side). Do not walk on the main girder, move by crawling on all fours instead.

Before installing the wire rope for the first time:

- Thread the temporary lightweight ropes (for example, a sailing rope, 180 m x D10, MBL 10 kN) through the guide rollers to the trolley, and twice from the trolley to the spreader, and from the trolley via the top beam sheaves at the machinery side to the hoisting machinery. Thread both hoist ropes of a single hoisting machinery unit at once.

Removing the old hoist wire ropes

There are two hoisting machinery units on the machinery platform which can be operated separately in the maintenance mode. During the rope replacement work, a single hoisting machinery unit is operated at a time, see *Operating a single hoist in the maintenance mode*.

The following instructions are for a single hoisting machinery unit (one drum-gear-motor combination). Repeat the procedure for the second unit with the same steps:

Unwinding the old hoist ropes to the friction turns and attaching the short auxiliary ropes:

1. Detach the support collar (that is installed with four screws) from the rope drum:

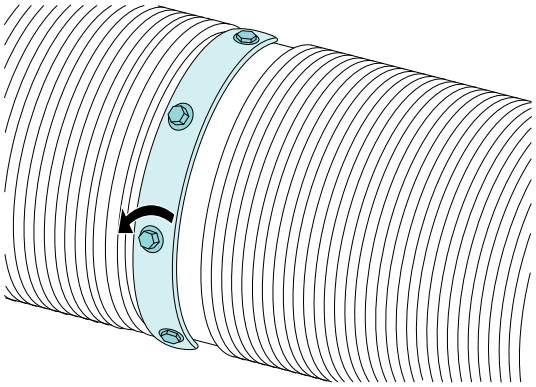

2. Lower the spreader on supports at 0.5 m height from the ground level so that the load is not hanging on the ropes (only the self weight of the ropes is currently affecting the rope reeving). Ensure that the spreader skew motion is not active, that is, the trolley camera view shows zero degree (0.0°) for the spreader skew.
3. Lower the hoist slightly so that the ropes become slack and the rope drum turns to a position where all the rope clamps are visible.
4. Turn off the main isolator for machineries to prevent the hoisting machinery motor from running.
5. Identify the ropes that belong to the rope reeving of the same hoisting machinery unit. The hoist wire ropes are attached in pairs to the middle of the rope drum with rope clamps with double clamping grooves. The counterweight rope is also attached to the rope drum, but its anchorage point is located on the support shaft-side flange of the rope drum, with the rope clamps with a single clamping groove. The counterweight rope shares one rope drum groove on the rope drum with the outer hoist rope.

Copyright © (2016) Konecranes. All rights reserved.

6. Check the rope handedness. One of the hoist ropes is a left-hand lay rope and the other is a right-hand lay rope. The counterweight rope and the hoist rope which share the same rope drum groove have the same rope handedness.
   See *Rope matching*, where the rope handedness is illustrated.
7. Attach short auxiliary ropes (D10, 30 m x 2) to the hoist ropes with rope grips (U-clamps) at approximately 2 m height from the machinery platform level so that the untied ends of the auxiliary ropes are pointing downwards.

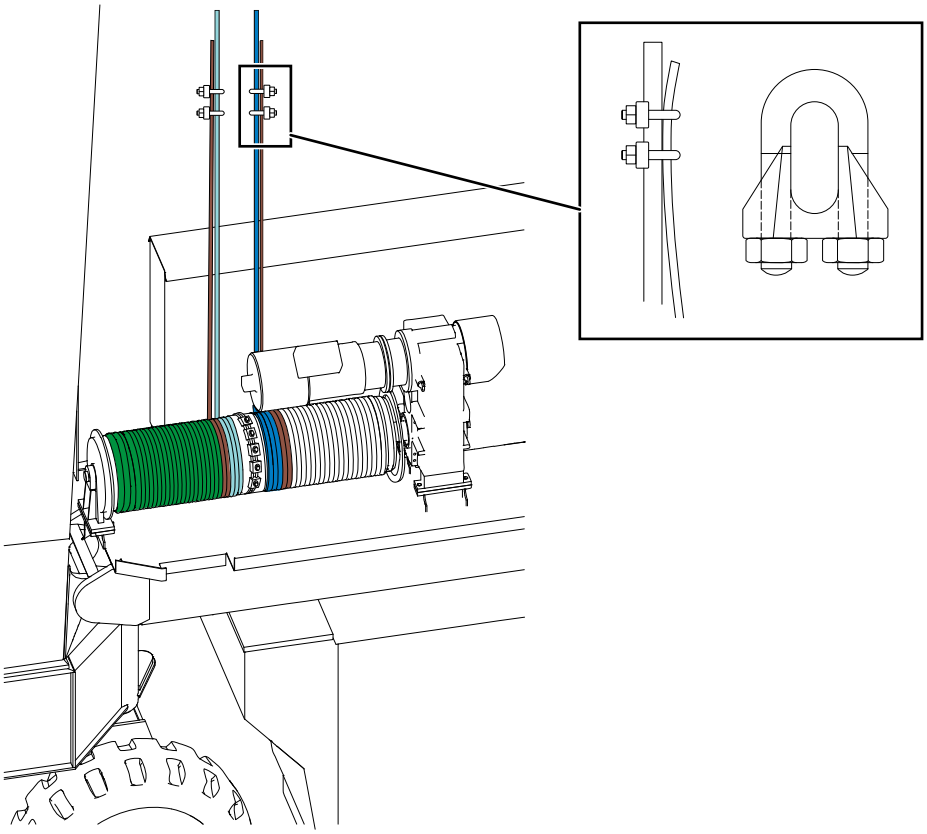

NOTE ***Do not attach any auxiliary rope to the counterweight rope. The counterweight rope is carrying the counterweight and there is a full tension force at the rope.***

8. Tie the free ends of the short auxiliary ropes around the rope drum so that the ends of the hoist ropes can later be removed.

NOTE ***Make sure that both short auxiliary ropes are attached to the hoist ropes with rope grips, and the free ends of the short auxiliary ropes are tied around the rope drum.***

NOTE ***Check that the spreader rests on the supports and the ropes are slack. Only the self weight of the ropes is affecting the hoist rope reeving.***

Preparing the removal of the hoist ropes:

9. Loosen the fixing screws of the rope clamps one by one, starting from the last rope clamp at the free end side of the ropes. Loosen the screws only slightly so that you can pull the ropes out from beneath the rope clamps slowly.

Copyright © (2016) Konecranes. All rights reserved.

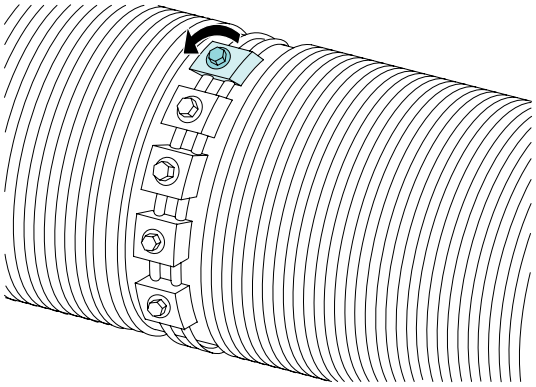

10. Remove the two hoist ropes one by one from the rope drum so that they hang freely from the rope sheaves locating at the top beam. Beware of the sliding of the ropes around the rope drum until the short auxiliary ropes stop the slip.

WARNING! CUTTING HAZARD

Sliding ropes can cause serious personal injury when hitting hands or other body parts.

Caution when removing the hoist ropes from the rope drum. Use protective clothing, safety gloves, and safety glasses.

11. Remove the rope clamps with screws from the rope drum. Clean and check the condition of the rope clamps, and store them for later reinstallation.
12. Attach a single eye cable grip to the hanging free end of one hoist rope and tie a long auxiliary rope (D10, 180 m) into the cable grip eye, for example, with a simple reef knot.

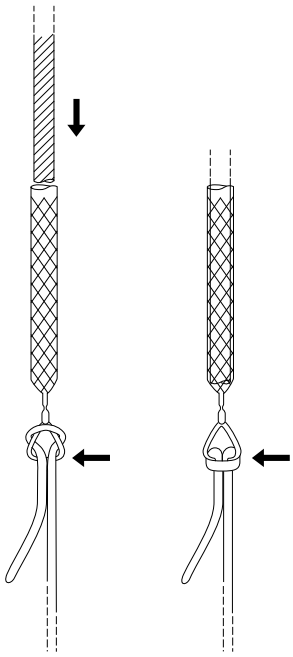

Ensure by pulling the long auxiliary rope that the cable grip remains attached to the free end of the hoist rope properly.

13. Secure the long auxiliary rope temporarily by attaching it to a steady anchorage point on the ground level at the span side of the crane. Attach the rope from right below the cable grip knot.
14. Repeat steps 12 and 13 for the other hoist rope.
15. Remove the short auxiliary ropes and the rope grips from both hoist ropes.
    Now the hoist ropes on the machinery platform level are ready for removal.

Copyright © (2016) Konecranes. All rights reserved.

Removing the hoist ropes:

16. Move up to the skew machinery platform at the access side of the crane. Identify the order of the hoist ropes running from the trolley to the horizontal sheaves on the skew machinery platform.
17. Attach a short auxiliary rope (D10, 30 m) to one hoist rope between the trolley and the horizontal sheaves with rope grips (U-clamps) in such a way that the free end of the short auxiliary rope points away from the trolley.

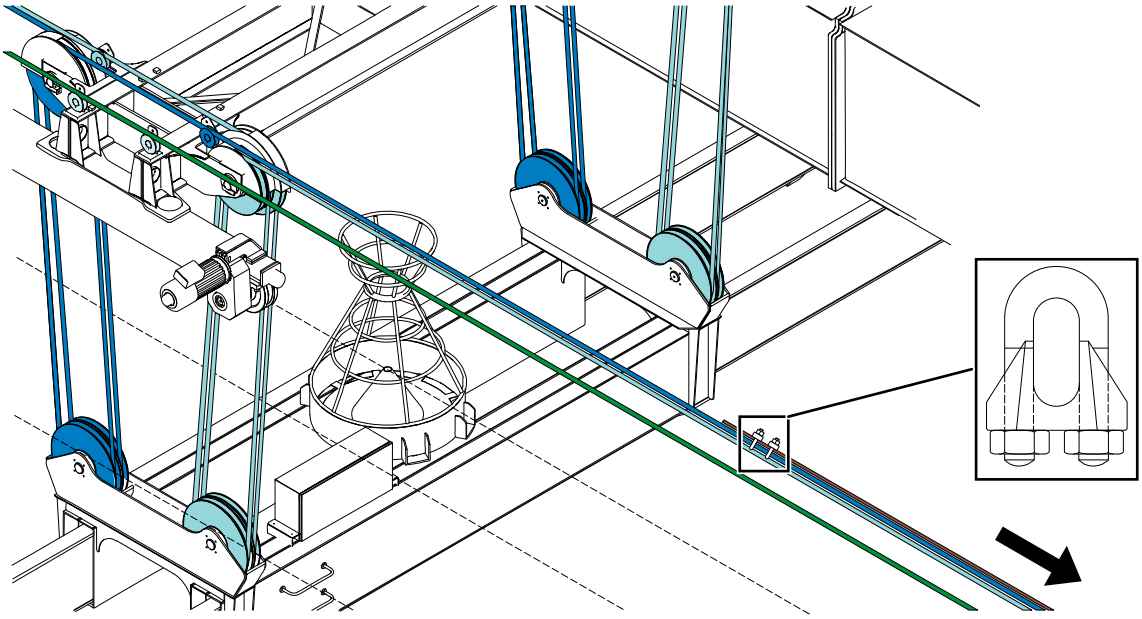

NOTE ***Do not attach any auxiliary rope to the counterweight rope. Counterweight rope is carrying the counterweight and there is a full tension force at the rope.***

18. Tie the free end of the auxiliary rope around the horizontal sheave bracket so that the auxiliary rope is as tight as possible.

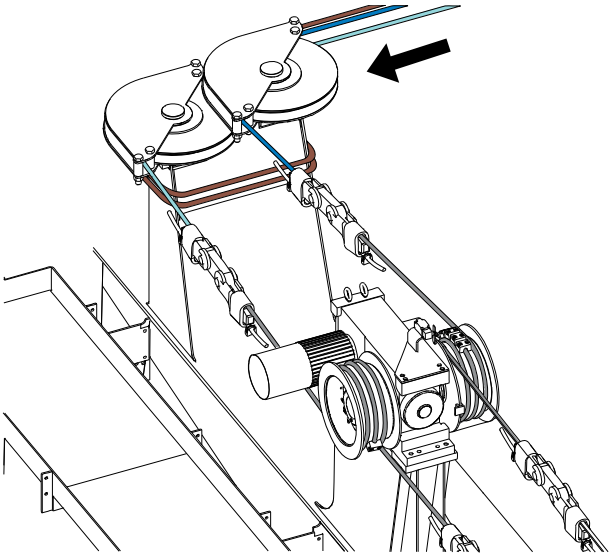

19. Remove the same hoist rope from the load cell between the skew machinery and the sheave bracket in the following way:
    19.1 Detach the wedge socket from the load cell.
    19.2 Detach the rope grip at the end of the hoist rope close to the wedge socket, and remove the wedge socket.

Copyright © (2016) Konecranes. All rights reserved.

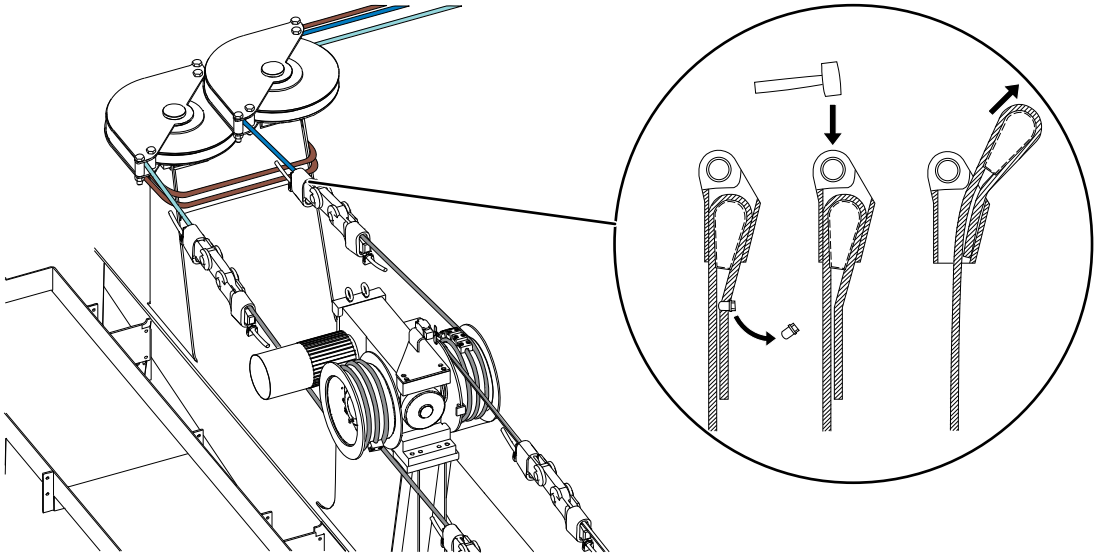

19.3 Pull the released old hoist rope out from the horizontal sheave, and thread it through the auxiliary guide roller located at the side of the sheave bracket:

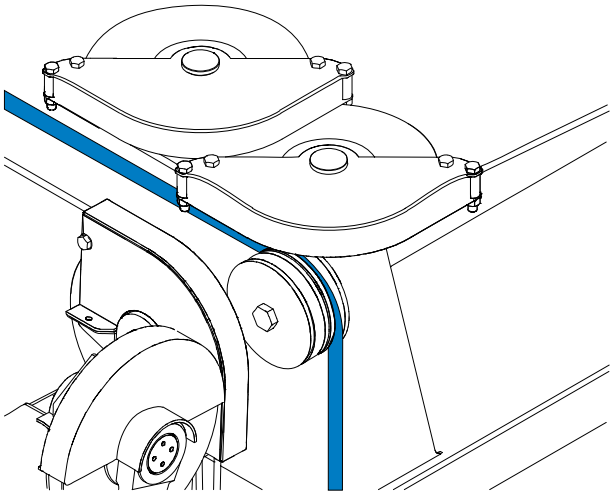

20. Attach a single eye cable grip to the free end of the hoist rope. Tie a short auxiliary rope (D10, 30 m) into the cable grip eye, for example, with a simple reef knot:

Copyright © (2016) Konecranes. All rights reserved.

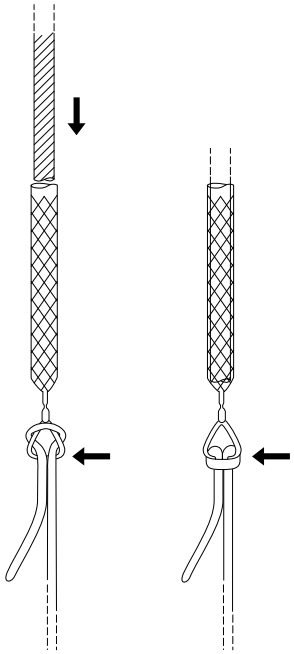

Ensure by pulling the short auxiliary rope that the cable grip remains attached to the free end of the hoist rope properly.

21. Drop the free end of the short auxiliary rope through the opening between the skew machinery platform walkway and the structure of the crane down to the ground level. Connect the short auxiliary rope to a reel of the reeving winch on the ground level:

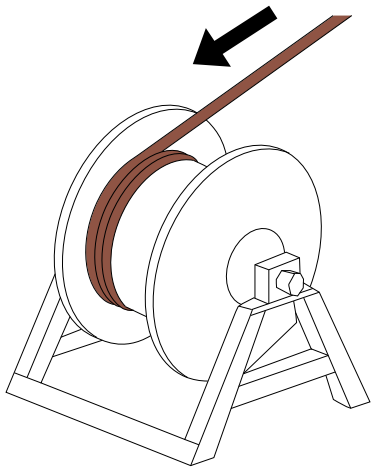

22. When steps 19...21 are completed properly, detach the short auxiliary rope between the trolley and the horizontal sheave bracket by removing the rope grips.
23. With the reeving winch, coil in the short auxiliary rope to the reel, and simultaneously, hold back the long auxiliary rope (which is tied to a steady anchorage point on the ground level) so that the hoist rope between these auxiliary ropes does not become loose. Coil in the old hoist rope around the reel with a few rounds, and connect it firmly on the reel.

NOTE ***When removing the old rope, hold back the long auxiliary rope so that the hoist wire rope does not become loose when it is removed from the rope reeving system.***

NOTE ***Do not try to hold back the long auxiliary rope by hands only. Instead, use a suitable support where the long auxiliary rope is wound around a round shank a few rounds. You can adjust the tightness of the rope by sliding the long auxiliary rope around the shank.***

24. Detach the short auxiliary rope from the reel of the reeving winch, and from the cable grip eye at the end of the hoist rope. Remove the cable grip from the end of the hoist rope.

Copyright © (2016) Konecranes. All rights reserved.

25. Continue using the reeving winch and coil in the old hoist rope to the reel completely. Remember to hold back the long auxiliary rope simultaneously, so that the hoist rope does not become loose at any point.
    When you have coiled in all of the old hoist rope to the reel, the long auxiliary rope has replaced the old hoist rope in the rope reeving of the crane.
26. Tie the end of the long auxiliary rope to a support at the machinery side platform.
27. Detach the old hoist rope from the long auxiliary rope at the access side of the crane, and tie the end of the long auxiliary rope temporarily to a suitable fixing point on the ground level.
28. Repeat the steps 17...27 for the other hoist rope of the same hoisting machinery unit.
29. Discard the old hoist ropes.

NOTE ***Never use the old hoist ropes again. Cut the old ropes into several shorter lengths. Discard the old rope pieces to a suitable disposal system.***

Installing the new hoist wire ropes

Installation of new hoist wire ropes takes place when you have first replaced the old hoist wire ropes of the single hoisting machinery unit with 2 long auxiliary ropes (D10, 180 m x 2), see *Removing the old hoist wire ropes*.

There are two hoisting machinery units on the machinery platform which can be operated separately in the maintenance mode. During the rope replacement work, a single hoisting machinery unit is operated at a time, see *Operating a single hoist in the maintenance mode*.

The following instructions are for a single hoisting machinery unit (one drum-gear-motor combination). Repeat the procedure for the second unit with the same steps.

At the machinery side:

1. Take new wire rope reels next to the machinery side of the crane (at the span side) on the ground level.

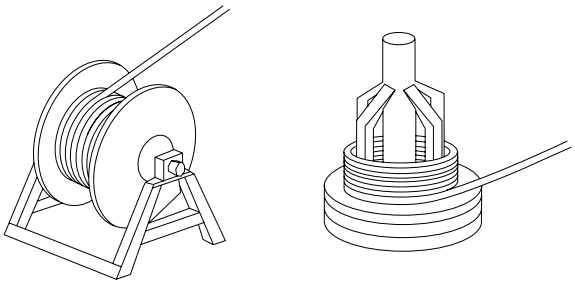

   Use ropes that are already cut to the correct length. For more information on the rope lengths, see *Wire rope technical data*.
2. Attach a single eye grip to the free end of one new hoist rope. Tie one of the long auxiliary ropes (already reeved into the system) to the single eye grip, for example, with a reef knot.

Copyright © (2016) Konecranes. All rights reserved.

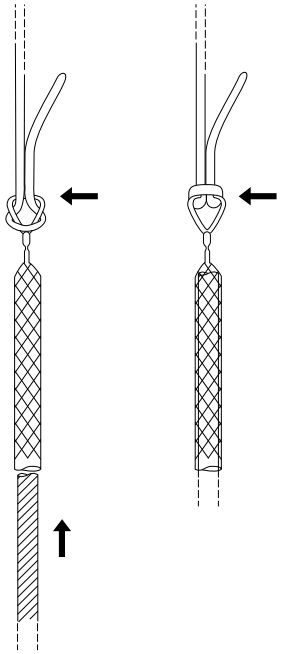

Ensure by pulling the long auxiliary rope that the single eye grip remains attached to the new hoist wire rope.

At the access side:

3. Connect the long auxiliary rope to a reel of the reeving winch on the ground level.
4. By using the reeving winch, coil in the long auxiliary rope, which at the same time reels the new hoist wire rope into the rope reeving system of the crane.

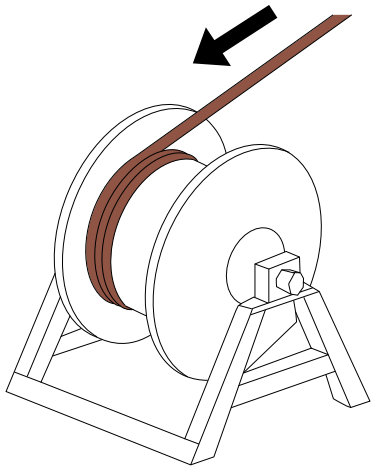

NOTE ***Ensure that the new hoist wire rope does not become loose when coiling in the auxiliary rope. Brake the reeling of a new hoist wire rope at the machinery side, if necessary, to keep the wire rope tense all the time.***

5. Stop the coiling when the end of the new hoist wire rope has passed the auxiliary sheave (located at the horizontal sheave bracket on the skew machinery platform) about 2 meters.

Copyright © (2016) Konecranes. All rights reserved.

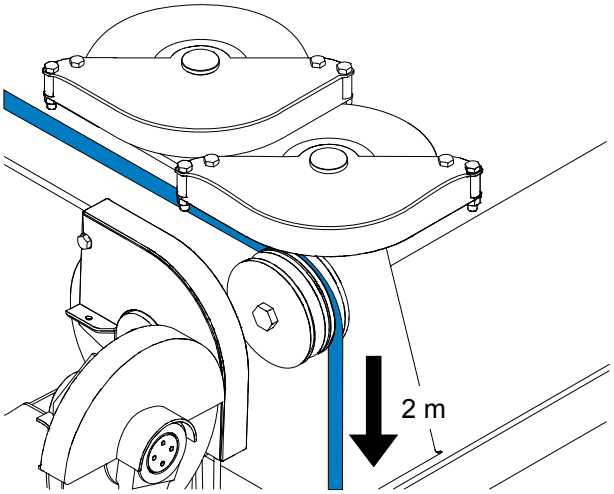

6. Attach a short auxiliary rope (D10, 30 m) to the new hoist wire rope between the trolley and the horizontal sheave with rope grips (U-clamps) in such a way that the free end of the short auxiliary rope points away from the trolley:

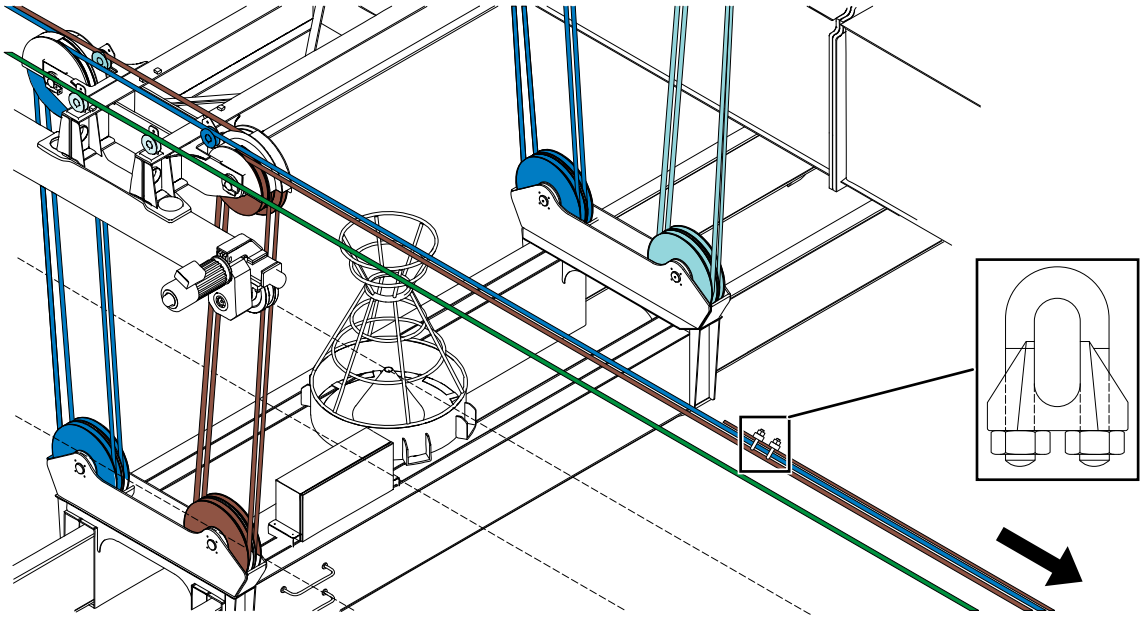

7. Tie the free end of the short auxiliary rope around the horizontal sheave bracket so that the auxiliary rope is as tight as possible.

Copyright © (2016) Konecranes. All rights reserved.

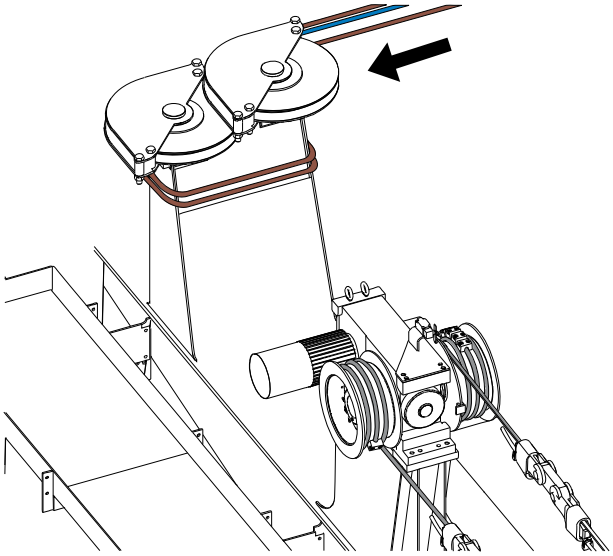

At the machinery side:

8. Attach a short auxiliary rope (D10, 30 m) to the new hoist wire rope with rope grips (U-clamps) at approximately 2 m height from the machinery platform level so that the free end of the short auxiliary rope is pointing downwards. Tie the free end of the short auxiliary rope temporarily around the rope drum.

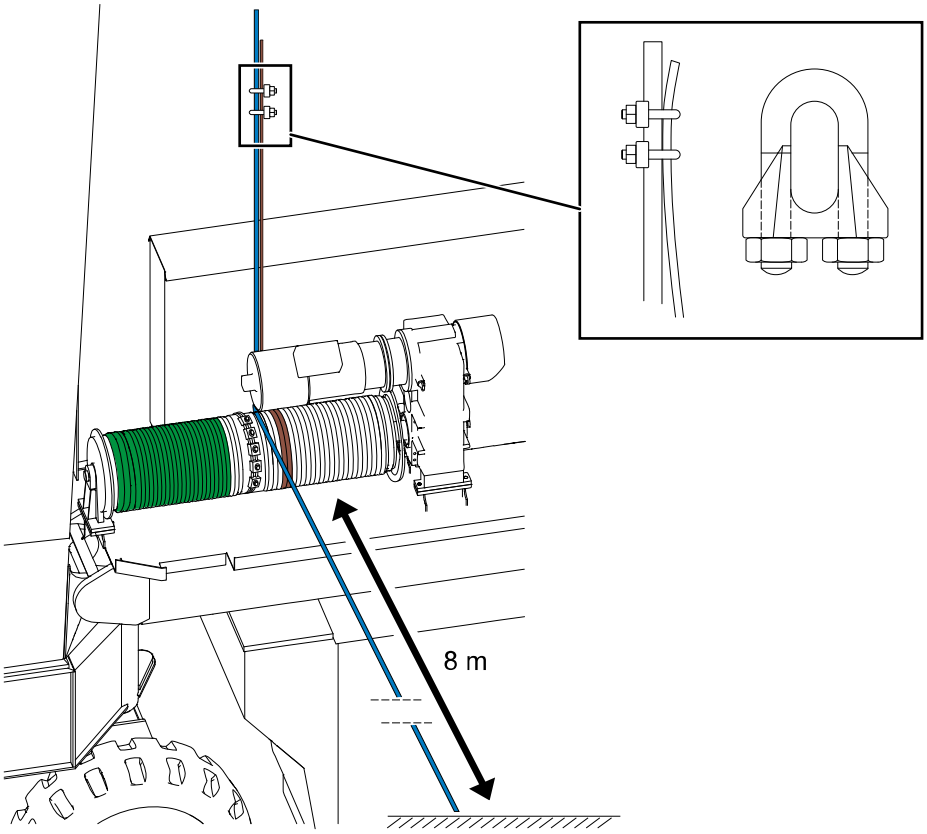

Ensure that there exist at least 8 m of free hoist wire rope left at the machinery side.

At the access side:

9. Detach the coiled long auxiliary rope from the new hoist wire rope and thread the new hoist wire rope through the correct horizontal rope sheave at the skew machinery platform.

Copyright © (2016) Konecranes. All rights reserved.

10. Mount a wedge socket close to the free end of the new hoist wire rope and install the rope grip to the rope end. Attach the wedge socket to the load cell in such a way that the rope end with a rope grip is locating underneath the rope, see the following illustration:

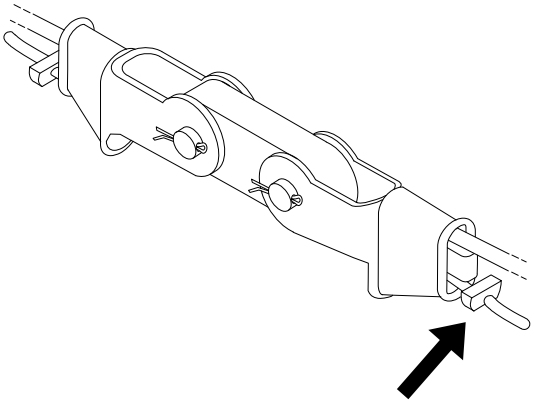

NOTE ***Do not remove the short auxiliary rope before you have attached the wedge socket to the load cell.***

11. Remove the short auxiliary rope and rope grips between the trolley and the horizontal sheave bracket.
12. Repeat the steps 2...11 for the second new hoist wire rope.

At the machinery side:

13. Wind the free ends of the new hoist wire ropes into the rope drum grooves in the following order:
    13.1 Wind first the new hoist rope next to the counterweight rope as many free turns as the counterweight rope allows.
    13.2 Wind the other hoist rope around the rope drum as many turns as the first one.
    13.3 Secure the new ropes against the rope drum by mounting the rope clamps one by one, starting from the free end side of the rope. Do not shorten the ropes at this point.

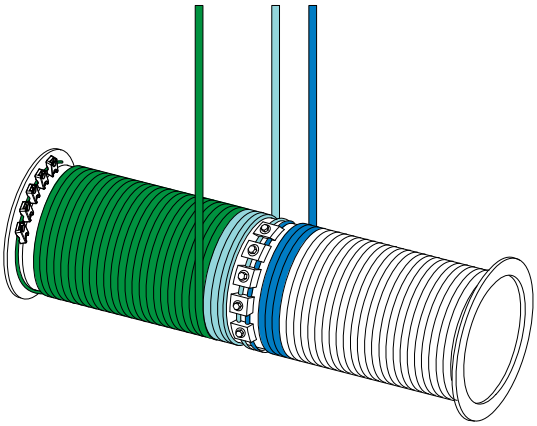

14. Remove the short auxiliary ropes and rope grips from the new hoist ropes.

NOTE ***Before you adjust any rope lengths and mount the support collars back to the rope drums, complete first the replacement of the old hoist wire ropes in both hoisting machinery units, tighten the ropes in the reeving system by driving the hoists, and balance the spreader.***

Balancing the hoist wire ropes

Carry out the hoist wire rope balancing tasks after you have replaced the hoist wire ropes.

Copyright © (2016) Konecranes. All rights reserved.

Balancing the hoist wire ropes when all ropes have been replaced, or when all ropes are installed for the first time:

1. Ensure that the skew machinery ropes on the rope drums are in their central positions, and the rope clamps are symmetrically aligned. Check that all four load cells are approximately in the same position between the skew and hoist ropes.
2. Lift the spreader at 1-m height from the ground.
3. Measure the spreader position:
   - Measure the spreader position with a level tool or
   - If the ground is level, measure the spreader height from each spreader corner.

NOTE ***If the ground is not level, the rope balancing is less accurate and errors are likely to occur.***

4. Take the highest spreader corner as a reference point, and adjust the length of the hoist wire ropes at the other spreader corners in order that all the spreader corners are balanced when seen either from the runway or from the trolley point of view:
   - 4.1 Lower the empty spreader as fully retracted on the suitably sized blocks of wood at ground level.
     Position the blocks under each spreader corner so that the spreader is kept in balance.
   - 4.2 Drive the hoist wire rope slack so that the rope clamps are accessible on the rope drums.
   - 4.3 Move the slack rope to the end of the rope drum and ensure with an auxiliary rope and rope grips.
   - 4.4 Mark on the rope how much you want to adjust the rope length, for example, with a marker pen.
   - 4.5 Loosen the fixing screws of the rope clamps and adjust the rope as marked.
   - 4.6 Tighten the fixing screws and remove the auxiliary ropes.
   - 4.7 Shorten the free end of the rope.
5. Repeat steps 4.1...4.7 for each rope until the spreader is in balance.

NOTE ***Keep the same reference corner all the time, and adjust only the other spreader corners.***

6. Measure the spreader skew in accordance with the bogies and the sill beams: move the ropes of the opposite spreader corners to position the spreader along the sill beams.
7. Check that there are 4.5 friction turns of each hoist wire rope on the rope drum when the spreader is at one-meter height. Shorten the ropes if necessary and check the spreader balance and position again.
8. Calibrate the hoists at 1-m height.

Balancing the hoist wire ropes when the counterweight ropes have already been replaced and balanced:

9. Ensure that the skew machinery ropes on the rope drums are in their central positions, and the rope clamps are symmetrically aligned. Check that all four load cells are approximately in the same position between the skew and hoist ropes.
10. Lift the spreader at 1-m height from the ground and ensure that the counterweights are exactly at the same height as the spreader.
11. Measure the spreader position:
    - Measure the spreader position with a level tool or
    - if the ground is level, measure the spreader height from each spreader corner.

NOTE ***If the ground is not level, the rope balancing is less accurate and errors are likely to occur.***

Copyright © (2016) Konecranes. All rights reserved.

12. Take the highest spreader corner as a reference point, and adjust the length of the ropes at the other spreader corners in order that all the spreader corners are balanced when seen either from the runway or from the trolley point of view.
13. Repeat the steps 9...12 for each rope until the spreader is in balance.

NOTE ***Keep the same reference corner all the time, and adjust only the other spreader corners.***

14. Measure the spreader skew in accordance with the bogies and the sill beams. Move the ropes of the opposite spreader corners to position the spreader along the sill beams.
15. Lift the spreader until both counterweights are locating 300 mm from the buffers (=the software stop limit). Measure the hoist height.
16. Move the hoist wire ropes on the rope drums so that the hoists are at their nominal height and the counterweights are locating 300 mm from the buffers.
17. Calibrate the hoists at 1-m height.

Removing the old counterweight ropes

There are two hoisting machinery units on the machinery platform which can be operated separately in the maintenance mode. During the rope replacement work, a single hoisting machinery unit is operated at a time, see *Operating a single hoist in the maintenance mode*.

NOTE ***Remove first one counterweight rope and replace is with the long auxiliary rope. Repeat the same steps for the other counterweight rope.***

First preparations for both counterweight ropes:

1. Raise the spreader so that it locates at the 1-m distance from the upper software stop limit (controlled by PLC software), which lowers the counterweights close to the buffers at the bottom of the guide rail tracks.
2. Remove the counterweight bottom covers to get the ropes and weights accessible.
3. Place 500-mm distance blocks on the counterweight buffers and tie the blocks to the buffer structures.
4. Raise slowly the spreader up to the software stop limit so that the counterweights descend on top of the distance blocks, and the counterweight ropes become slack. Ensure that the rope drums turn to a position where all the counterweight rope clamps are visible.

NOTE ***The safety limit (a mechanical limit switch) is not functioning due to the installed distance blocks.***

5. Turn off the main isolator for machineries to prevent the hoisting machinery motors from running.

Attaching a short auxiliary rope to a single counterweight rope:

6. Attach a short auxiliary rope (D10, 30 m) to the counterweight rope with rope grips (U-clamps) at approximately 2-m height from the machinery platform level so that the untied end of the auxiliary rope is pointing downwards.

Copyright © (2016) Konecranes. All rights reserved.

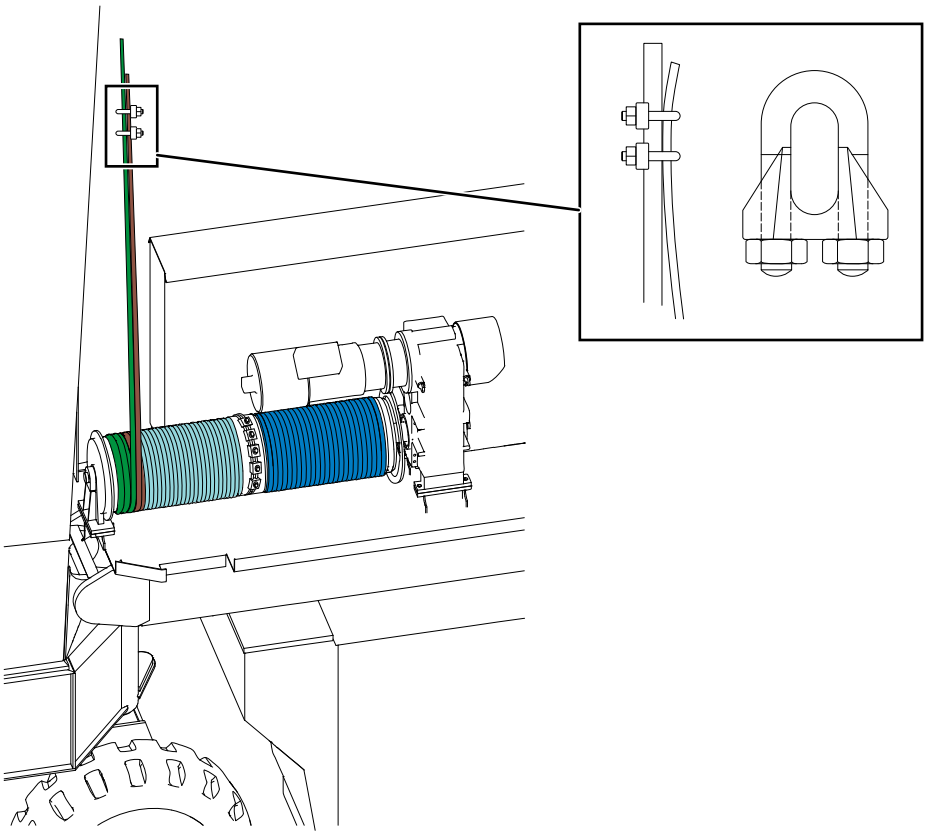

7. Connect the untied end of the short auxiliary rope around the rope drum so that you can later remove the end of the counterweight rope on the rope drum.

Preparing the removal of a single counterweight rope:

8. Loosen the fixing screws of the counterweight rope clamps one by one, starting from the last rope clamp at the free end side of the rope. Loosen the screws only slightly so that you can pull the rope out from beneath the rope clamps slowly.

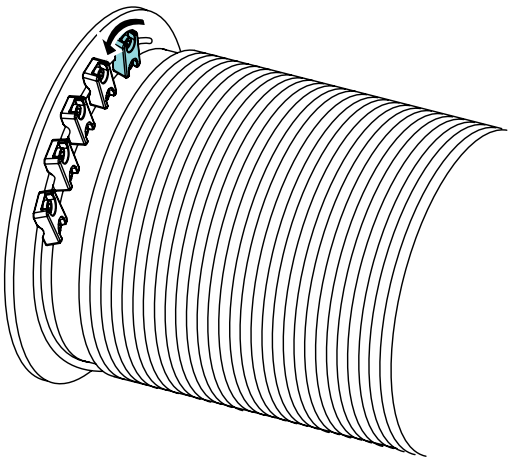

9. Remove the counterweight rope from the rope drum so that it hangs freely from the rope sheave locating at the top beam. Beware of the sliding of the rope around the rope drum until the short auxiliary rope stops the slip.

Copyright © (2016) Konecranes. All rights reserved.

WARNING! CUTTING HAZARD

Sliding rope can cause serious personal injury when hitting hands or other body parts.

Caution when removing the counterweight rope from the rope drum. Use protective clothing, safety gloves, and safety glasses.

10. Remove the rope clamps with screws from the rope drum. Clean and check the condition of the rope clamps, and store them for later reinstallation.
11. Attach a single eye cable grip to the hanging free end of the counterweight rope and tie a long auxiliary rope (D10, 180 m) into the cable grip eye, for example, with a simple reef knot.

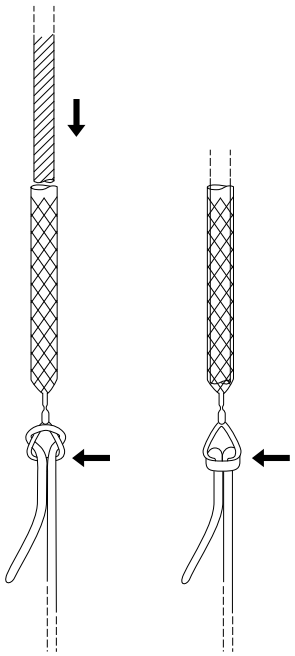

Ensure by pulling the long auxiliary rope that the cable grip remains attached to the free end of the counterweight rope properly.

12. Secure the long auxiliary rope to a suitable anchorage point on the ground level near to the machinery platform at the span side of the crane. Coil it first a few rounds around a round shank and then tie it to the anchorage point.
13. Remove the short auxiliary rope and the rope grips from the counterweight rope.
    Now the counterweight rope on the machinery platform level is ready for removal.

Removing a single counterweight rope:

14. Move up to the skew machinery platform on the access side.
15. Attach a short auxiliary rope (D10, 30 m) with rope grips (U-clamps) to the counterweight rope below the wedge socket. Attach the short auxiliary rope in such a way that the rope free end points upwards (see the following graphics).
16. Tie the free end of the short auxiliary rope around the sheave axle behind the sheave cover so that the auxiliary rope is as tight as possible:

Copyright © (2016) Konecranes. All rights reserved.

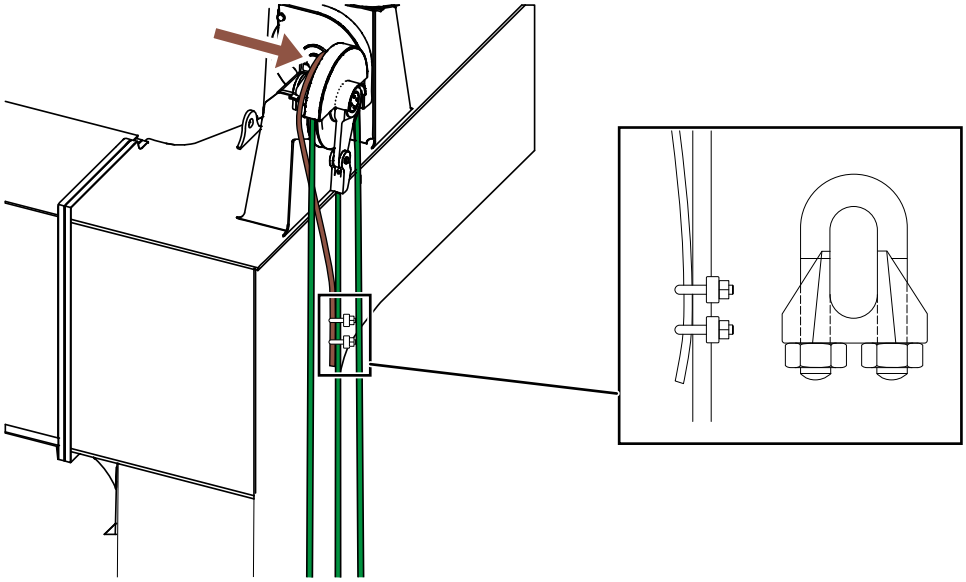

NOTE ***Make sure that the short auxiliary rope is attached to the counterweight rope and the free end of the auxiliary rope is tied around the sheave axle.***

17. Remove the wedge socket and replace it with an auxiliary sheave in the following way:
    17.1 Detach the wedge socket first from the hinge part at the end of the sheave axle.

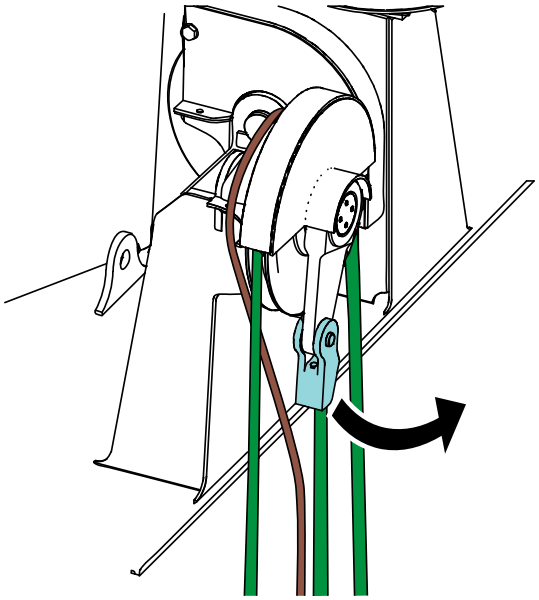

17.2 Detach the wedge socket from the end of the counterweight rope.

Copyright © (2016) Konecranes. All rights reserved.

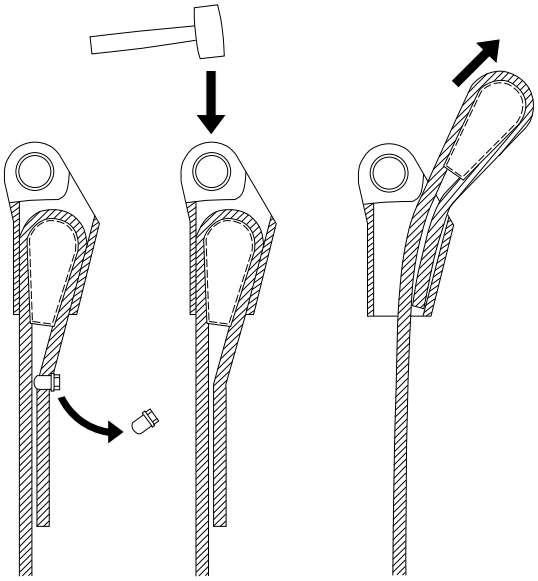

17.3 Mount an auxiliary sheave to the place of the wedge socket.

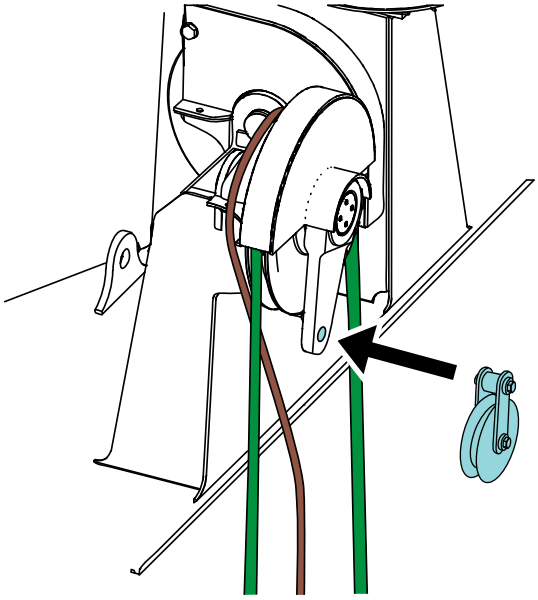

18. Attach a single eye cable grip to the released end of the counterweight rope. Tie a short auxiliary rope (D10, 30 m) into the cable grip eye, for example, with a simple reef knot:

Copyright © (2016) Konecranes. All rights reserved.

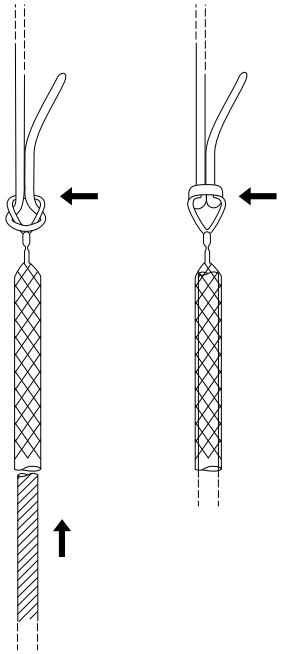

Ensure by pulling the short auxiliary rope that the cable grip remains attached to the counterweight rope properly.

19. Thread the auxiliary rope through the auxiliary sheave that is temporarily mounted to the place of the wedge socket.

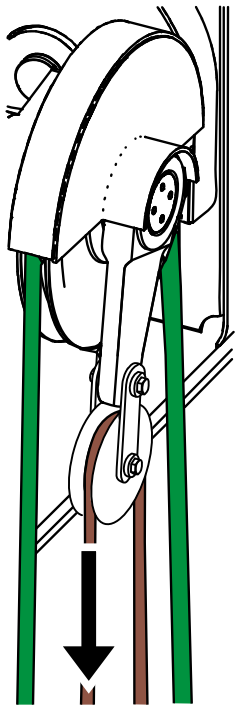

20. Drop the free end of the short auxiliary rope down to the ground level, and connect the rope to a reel of the reeving winch:

Copyright © (2016) Konecranes. All rights reserved.

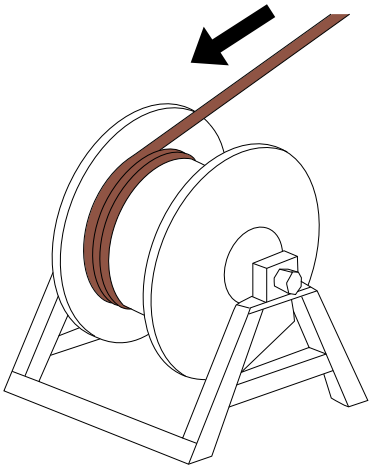

21. When steps 15...20 are completed properly, detach the first short auxiliary rope that is holding the counterweight rope with rope grips on the skew platform level.
22. With the reeving winch, coil in the other short auxiliary rope (that is attached to the counterweight rope with a single eye cable grip) to the reel, and simultaneously, hold back the long auxiliary rope (which is tied to a steady anchorage point at the machinery platform side) so that the counterweight rope between these auxiliary ropes does not become loose. Coil in the old counterweight rope around the reel with a few rounds, and connect it firmly on the reel.

NOTE ***When removing the old counterweight rope, hold back the long auxiliary rope so that the counterweight rope does not become loose when it is removed from the rope reeving.***

NOTE ***Do not try to hold back the long auxiliary rope by hands only. Instead, use a suitable support where the auxiliary rope is wound around a round shank a few times. You can adjust the tightness of the rope by sliding it around the shank.***

23. Detach the short auxiliary rope from the reel of the reeving winch, and from the cable grip eye at the end of the old counterweight rope. Remove the cable grip also from the end of the old rope.
24. Continue using the reeving winch and coil in the old counterweight rope to the reel completely. Remember to hold back the long auxiliary rope simultaneously, so that the counterweight rope does not become loose at any point.
    When you have coiled in all of the old counterweight rope to the reel, the long auxiliary rope has replaced the old rope in the rope reeving of the crane.
25. Tie the end of the long auxiliary rope to a temporary anchorage point at the machinery side platform.
26. Detach the old counterweight rope from the long auxiliary rope at the access side of the crane, and tie the end of the long auxiliary rope temporarily to a temporary anchorage point on the ground level.
27. Repeat the procedure (steps 6...26) also for the other old counterweight rope.
28. Discard the old counterweight ropes.

NOTE ***Never use the old counterweight ropes again. Cut the old ropes into several shorter lengths. Discard the old rope pieces to a suitable disposal system.***

Copyright © (2016) Konecranes. All rights reserved.

Installing the new counterweight ropes

Installation of new counterweight wire ropes takes place when you have first replaced the old counterweight ropes with 2 long auxiliary ropes (D10, 180 m x 2), see *Removing the old counterweight ropes*.

There are two hoisting machinery units on the machinery platform which can be operated separately in the maintenance mode. During the rope replacement work, a single hoisting machinery unit is operated at a time, see *Operating a single hoist in the maintenance mode*.

At the machinery side:

1. Take new wire rope reels to the machinery side of the crane (at the span side) on the ground level.

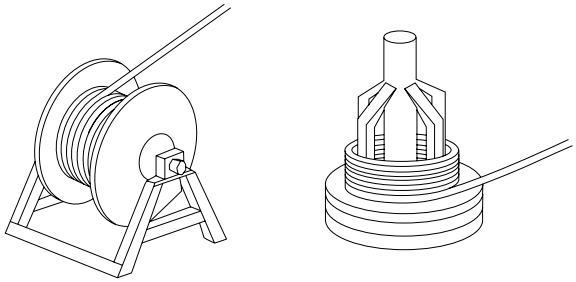

   Use ropes that are already cut to the correct length. For more information on the rope lengths, see *Wire rope technical data*.

2. Attach a single eye cable grip to the free end of one new counterweight wire rope. Tie one of the long auxiliary ropes (already reeved into the system) to the single eye cable grip, for example, with a reef knot.

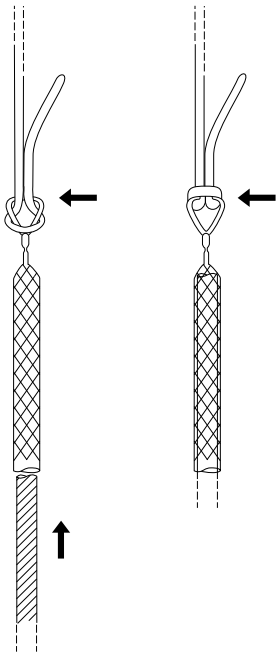

   Ensure by pulling the long auxiliary rope that the cable grip remains attached to the new counterweight rope.

At the access side:

3. Connect the long auxiliary rope to a reel of a reeving winch on the ground level.
4. By using the reeving winch, coil in the long auxiliary rope, which at the same time reels the new counterweight rope into the rope reeving system of the crane.

Copyright © (2016) Konecranes. All rights reserved.

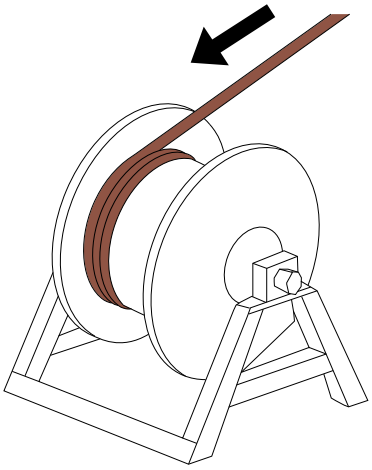

NOTE ***Ensure that the new counterweight rope does not become loose when coiling in the auxiliary rope. Brake the reeling of a new counterweight rope at the machinery side, if necessary, to keep the rope tense all the time.***

5. Stop the coiling when the end of the new counterweight rope has passed the auxiliary sheave (that is attached to the hinge part) about half a meter.

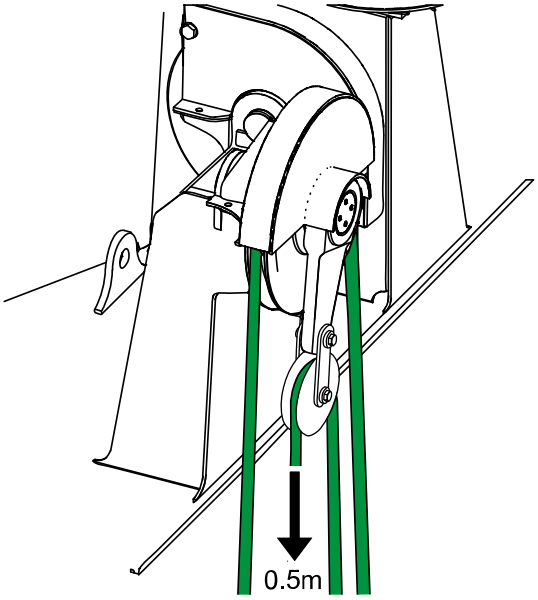

6. Attach a short auxiliary rope (D10, 30 m) to the new counterweight rope with rope grips (U-clamps) in such a way that the free end of the short auxiliary rope points upwards.

Copyright © (2016) Konecranes. All rights reserved.

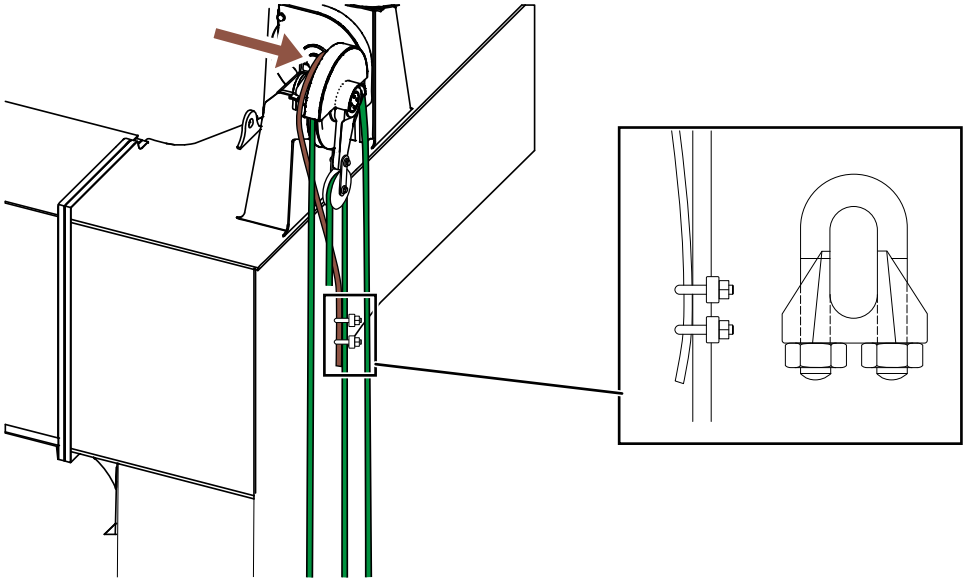

7. Tie the free end of the short auxiliary rope around the sheave axle behind the sheave cover so that the auxiliary rope is as tight as possible.

At the machinery side:

8. Attach a short auxiliary rope (D10, 30 m) to the new counterweight rope with rope grips (U-clamps) at approximately 2-m height from the machinery platform level so that the untied end of the auxiliary rope is pointing downwards. Tie the free end of the short auxiliary rope temporarily around the rope drum.

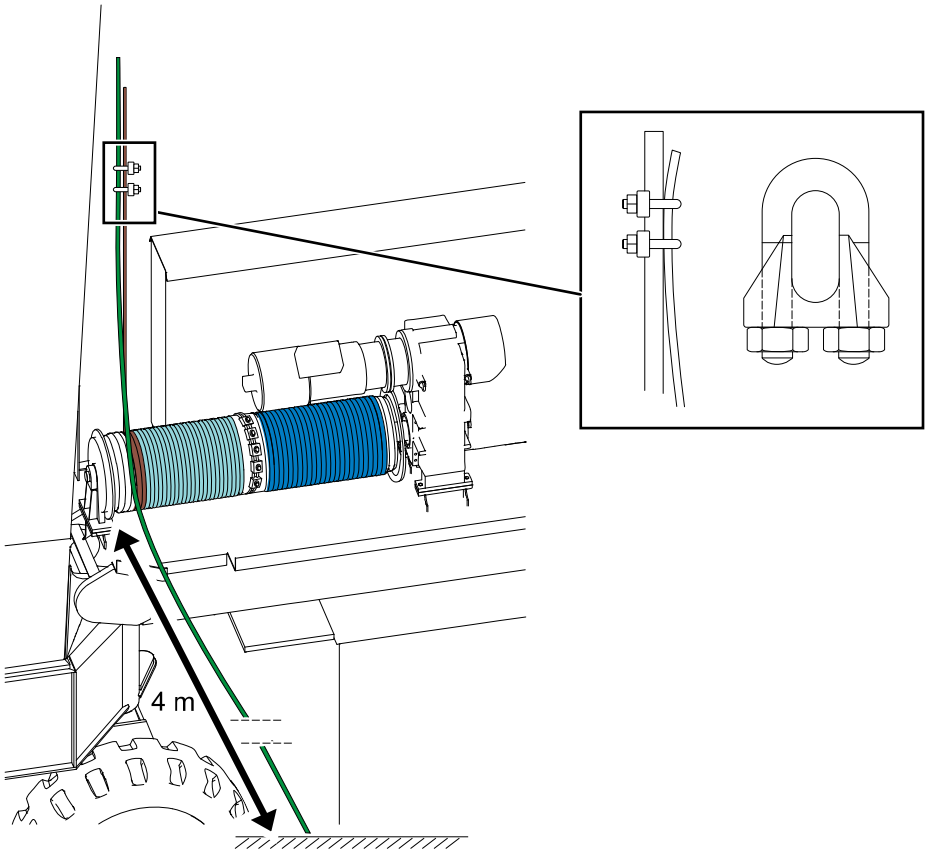

Ensure that there is at least 4 m of free counterweight rope left at the machinery side.

At the access side:

9. Detach the long auxiliary rope from the new counterweight rope at the skew platform.

Copyright © (2016) Konecranes. All rights reserved.

10. Unmount the auxiliary sheave from the hinge part.
11. Reinstall the wedge socket:
    11.1 Mount the wedge socket close to the free end of the new counterweight rope and install the rope grip to the counterweight rope end.

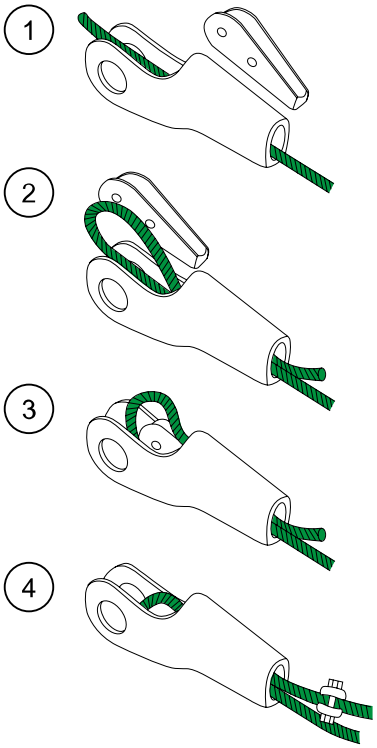

    11.2 Reinstall the wedge socket to the hinge part at the end of the sheave axle.

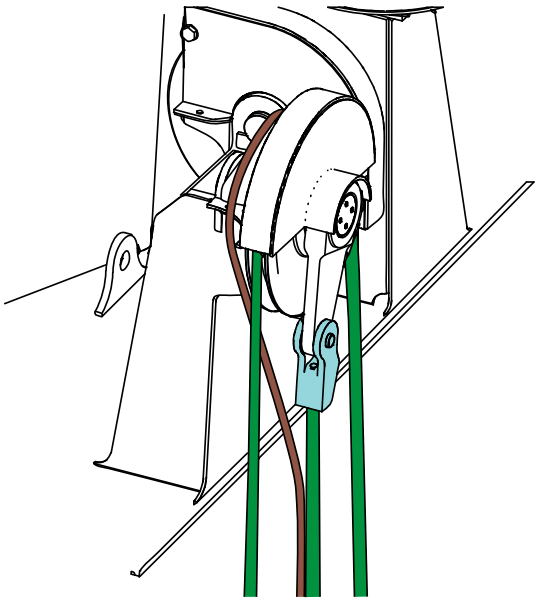

12. Detach the short auxiliary rope by removing the rope grips.

At the machinery side:

13. Wind the free end of the counterweight rope around the empty grooves on the rope drum, and install the rope clamps one by one, starting from the free end side of the rope. Do not shorten the rope at this point.

Copyright © (2016) Konecranes. All rights reserved.

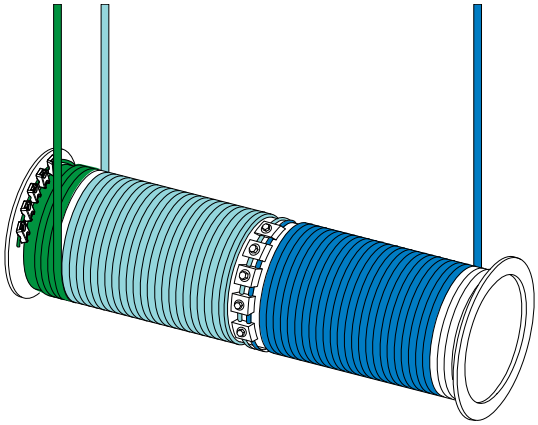

NOTE ***Install the counterweight rope in such way that there is only a half a round of an empty groove between the outer hoist wire rope and the new counterweight rope.***

14. Remove the short auxiliary rope and rope grips at the machinery side.
15. Repeat all the steps for the other new counterweight wire rope.

NOTE ***After both counterweight ropes have been replaced with new ones, adjust the length of the new ropes so that the counterweights hang in the correct positions.***

Balancing the counterweight wire ropes

Carry out the counterweight rope balancing tasks normally after you have balanced the hoist wire ropes.

1. Lift the spreader until one of the counterweights is 300 mm from the buffer (the location of the software stop limit).
2. Measure the hoist height and the distance of both counterweights from the buffers.
3. Move the counterweight ropes on the rope drum so that the hoists are at their nominal height position and **both** counterweights are locating 300 mm from the buffers.
4. Adjusting the counterweight rope length:
   - 4.1 Install and tie the distance blocks of 500 mm under the counterweight buffers.
   - 4.2 Drive the counterweight wire ropes slack so that the rope clamps are accessible on the rope drums.
   - 4.3 Move the slack counterweight ropes to the end of the rope drums and ensure them with the auxiliary ropes and rope grips.
   - 4.4 Mark on the ropes how much you want to adjust the rope length, for example, with a marker pen.
   - 4.5 Loosen the fixing screws of the rope clamps and adjust the ropes as marked.
   - 4.6 Tighten the fixing screws and remove the auxiliary ropes.
   - 4.7 Shorten the free ends of the ropes.

Preparing the crane for normal operation

Before handing the crane back to normal operation after any maintenance work on the wire ropes (or on the hoist limits), carry out the following tasks and functional checks:

Remove maintenance tools and equipment

1. Remove all maintenance tools and equipment from the crane, such as the ratchet winches, auxiliary ropes, or temporary sheaves.

Check that the maintenance personnel has completed their work

2. Make sure that there is no personnel within the operating range of the machinery.

Copyright © (2016) Konecranes. All rights reserved.

Check ropes and sheaves

3. Check that the hoist and counterweight ropes run smoothly around all sheaves, and that the ropes feed smoothly on and off the rope drums. Check that the sheaves or anchorage points tilt inwards when the spreader is near to the fully raised position.
4. Operate the spreader skew in either direction for a small degree from the central position. Check that the skew ropes feed smoothly on and off the skew rope drums.

Switch off the maintenance mode

5. Set the maintenance mode **OFF** on the **Maintenance Mode** page on the operator panel.

Remove the safety isolation of gantry and trolley traveling motors

6. Switch on the overload circuit breakers for these motors (that have manually been tripped for the safety isolation of the motions), and remove their safety notices.

Test the hoist operations

7. Select **Crane ON** on the controller to switch on the controller and the drives.
8. Check the error messages on the operator panel. Make sure that there are no standing alarm or fault for the hoisting machinery or other equipment.
9. Using the controller, check that the hoists operate smoothly over their full working range. Check also the operation of the hoist trim.
10. Check on the **Hoist Limits** page that both hoists indicate the height measurement correctly. Check also that the hoist position difference calculated between the two absolute encoders is less than 18 cm.
11. Using the controller, check that the suspended spreader can skew in both directions.

4.12 Maintaining the skew machinery

4.12.1 Skew machinery maintenance schedule

Table 57. Skew machinery electrical maintenance schedule

Component	Maintenance task	500 h	1000 h	2000 h	4000 h (1 year)	Other interval/ Notes
Motor and incremental encoder	See *Maintenance schedule for motors*					
Position (absolute) encoder	Visual	x				
	Operational (check operations via the operator panel and the camera display)				x	
	Check mounting and cabling				x	

Copyright © (2016) Konecranes. All rights reserved.

Component	Maintenance task	500 h	1000 h	2000 h	4000 h (1 year)	Other interval/ Notes
Mechanical limit switch	Visual	x				
	Operational				x	
Wind meter	Visual	x				
	Check that the wind speed is displayed correctly on the main display				x	

Table 58. Skew machinery mechanical maintenance schedule

Component	Maintenance task	500 h	1000 h	2000 h	4000 h (1 year)	Other interval/ Notes
Brake assembly	See *Maintenance schedule for mechanical disc brakes*					
Gear reducer (QM9LC1-450)	Visual	x				
	Operational				x	
Skew machinery rope drums	Visual	x				
Rope clamps	Visual	x				
	Check bolt torque tightening				x	

Table 59. Skew machinery lubrication schedule

Component	Maintenance task	500 h	1000 h	2000 h	4000 h (1 year)	Other interval/ Notes
Gear reducer	Oil level check	x				See also the manufacturer's instructions
	Oil change				x	See also the manufacturer's instructions
Motor coupling	Replace coupling grease					6000 hours

Copyright © (2016) Konecranes. All rights reserved.

Component	Maintenance task	500 h	1000 h	2000 h	4000 h (1 year)	Other interval/ Notes
Mechanical limit switch (lever mechanism)	Oil spray		x			
Electrical equipment cubicle door hinges	Oil spray				x	
Access gates hinges	Oil spray				x	

Table 60. Skew machinery structural maintenance schedule

Component	Maintenance task	500 h	1000 h	2000 h	4000 h (1 year)	Other interval/ Notes
Skew machinery mountings	Check bolt torque tightening					5 years

4.13 Maintaining the spreader

For information on the inspection requirements and detailed instructions, see the manufacturer's documentation.

4.13.1 Changing the spreader cable

The flexible cable between the spreader and the trolley is a special type of cable, with several features that allow it to self-coil into the basket on the top of the spreader main frame. The cable cores are made from fine strands of wire for good flexibility. The cable lay-up includes several strings of lead beads which assist the coiling and also reduce the effects of side winds on the suspended cable.

Although the cable is specially designed for this application, the cable wears out as a result of continual crane operations. Replace the damaged or worn-through spreader cable at the first sign of defect. The electric power to the spreader motor and the logic signals to and from the spreader are essential for the continued operation of the crane.

Safety during the spreader cable change

DANGER

ELECTRICAL SHOCK HAZARD

Handling a spreader cable before disconnecting the voltage supply exposes to the electrical shocks, which will lead to death or serious personal injury.

Disconnect the power supply to the spreader cable before physically removing the old cable. Always ensure by measurement that there is no voltage present in the cable terminals.

Copyright © (2016) Konecranes. All rights reserved.

⚠ WARNING

MOVING MACHINERY HAZARD

Moving or rotating machinery could cause accidents during the maintenance operations, which could cause death or serious personal injury.

To avoid any unexpected movements of the crane, switch off or isolate the gantry and trolley traveling motors, so that they are prevented from running.

Before starting the spreader cable change, take the following safety precautions:

Gantry parking

Before the spreader cable change, position the gantry at a suitable level location, away from any container stacks. Make sure that sufficient clear space is available at ground level for the cable laying out.

Trolley parking

For the safe access, park the trolley at normal parking position.

Spreader retracted

Before the cable change, retract the spreader to minimum length.

Isolation of gantry traveling motors

Manually trip the circuit breakers between the inverters and the gantry traveling motors.

Attach suitable safety notices at these isolation points. Make sure not to switch on them by mistake, until the maintenance work is complete.

Isolation of traveling motors

To prevent the trolley traverse motion, manually trip the overload circuit breakers between the inverter and the individual traveling motors.

These circuit breakers locate in the electrical equipment cubicle (E2) of the trolley platform.

Attach suitable safety notices at these isolation points.

Isolation of the spreader cable

Disconnect the power supply to the spreader cable at the electrical equipment cubicle (E2) of the trolley platform.

Ensure that there is no voltage at the supply point of the E2 cubicle by measuring it.

Attach suitable safety notices at these isolation points.

Procurement of a new spreader cable

Make sure that the specification of the replacement spreader cable is same as the original one.

Procure the new cable directly from the manufacturer or through the local distributor.

Typical spreader cable specification	Spreaderflex
Cores	36 x 2.5 mm² + 6FO

For each specific crane, refer to the Konecranes electrical drawings for further technical details. The cable list gives the correct type of cable and the numbers or sizes of the cores.

NOTE ***There are several types of spreader cables with different number of cores and with various sizes of conductors. Make sure that the correct cable is procured.***

Copyright © (2016) Konecranes. All rights reserved.

Spreader cable length

The length of the spreader cable depends on the lifting height of the crane.

When determining the required length of the new cable, make sure that there is sufficient allowance for some spare length to always remain in the spreader basket.

Make additional allowances for the terminations at both the ends.

Equipment required for spreader cable changing

Spreader cable change requires a hydraulic manlift. The manlift must have a sufficient lifting height to reach the under side of the trolley (for the mechanical attachment fittings).

WARNING! FALLING HAZARD

Lifting personnel with a manlift includes a risk of falling from heights, which could cause or serious injury.

Each person in the manlift must always wear a safety harness and be attached to the platform.

Removing the old spreader cable

To perform this maintenance task, at least two, but preferably three electricians required.

1. Switch the maintenance mode ON from the **Maintenance Mode** page in the operator panel. Maintenance mode is required for lowering and lifting the spreader during the spreader cable change operation.
2. Disconnect the power supply to the spreader cable at the trolley electrical equipment cubicle (cubicle E2).
   Ensure that there is no voltage at the supply point of the E2 cubicle by measuring it.
3. Confirm the terminal details of the spreader cable before detaching the cable cores:
   3.1 Make a paper copy of the termination details for the spreader cable (from the appropriate wiring schedule in the Konecranes electrical drawings).
   3.2 Using the Konecranes wiring schedule as a check list, confirm that each numbered core of the old spreader cable terminates correctly. If not, record the differences for later installation of the new cable with the identical connections.

Detaching the old spreader cable:

4. One electrician working on the trolley platform level: detach the spreader cable cores from the terminals.
5. Raise the manlift (with two electricians) just under the trolley bottom.

WARNING! FALLING OBJECTS HAZARD

Falling cable may cause death or serious personal injury. It can also damage the spreader equipment.

Make sure that the manlift operation area is secured and isolated, and nobody is working under the manlift operation area.

6. While one electrician is threading the old spreader cable out through the cable flange at the bottom of the E2 cubicle, the other two electricians in the manlift are receiving the old cable coming out from the trolley bottom.
7. Detach the spreader cable ties from the cable holder, and remove one of the cable holder shackles from the bottom of the trolley.

Copyright © (2016) Konecranes. All rights reserved.

WARNING! FALLING OBJECTS HAZARD

Spreader cable length between the trolley and the ground typically weighs 70 kg150 lb). The falling cable could cause death or serious personal injury. It can also damage the spreader equipment.

Be careful when detaching the old cable. Do not let the cable to drop down to the ground from the bottom of the trolley.

8. Attach an auxiliary rope to hold the old spreader cable before removing the other cable holder shackle.
9. Remove the second cable holder shackle from the bottom of the trolley and by holding back the old cable with the attached auxiliary rope, lower the old cable carefully to the cable basket on top of the spreader.
10. Lower the remaining length of the auxiliary rope carefully to the ground. Do not let it entangle with spreader sheaves or hoist wire ropes.
11. Lower the manlift on the ground level.
12. Lower the spreader on the ground level (fixed guides are touching the ground level).
13. On the ground level, disconnect the old spreader cable from the spreader junction box.
14. Discard the old cable.

NOTE ***Never use the old spreader cable again. Cut the old cable into several shorter lengths, and discard the old cable pieces to a suitable disposal system.***

Installing the new spreader cable

The assumption here is that the old spreader cable has been removed as described in chapter *Removing the old spreader cable*.

NOTICE

RISK OF MATERIAL DAMAGE

When installing a new spreader cable, be careful not to damage the cable fibers

Do not bend or twist the cable with force during installation work.

1. Check from the **Maintenance Mode** page in the operator panel that you have the maintenance mode ON.
2. Connect the new spreader cable to the spreader junction box according to the electrical drawings.
3. Position the supply drum of the new spreader cable with the correct side up and coil the new spreader cable to the basket. Lubricate the new cable at the same time.

NOTE ***Do not let the supply drum turn when coiling in the cable to the basket.***

NOTE ***If the cable supply drum is the wrong way up, or if the cable coils in a wrong way into the basket, twisting load acts on the cable. Correct either of these faults before the transfer of the cable into the basket.***

NOTE ***Remember to lubricate also the cable sheath.***

4. Attach the hanging free end of the auxiliary rope onto one eye of the braided sock at the end of the new spreader cable.
   The braided sock is already fitted to the spreader cable end by the cable manufacturer:

Copyright © (2016) Konecranes. All rights reserved.

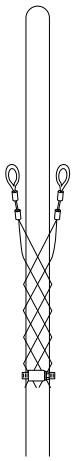

5. Lift the spreader to the maximum height.
6. Lift a manlift (with two electricians) under the trolley so that the auxiliary rope can be reached.
7. Using the auxiliary rope as a hoist, pull the free end of the spreader cable out from the basket and refit the two attachment shackles between the braided cable ‘sock’ and the brackets at the trolley bottom. Remove the auxiliary rope.
8. Feed the new cable end through the cable flange at the bottom of the trolley. The third electrician is required on the trolley platform to connect the spreader cable to the E2 cubicle terminals according to the termination details checked and recorded during the old cable removal.

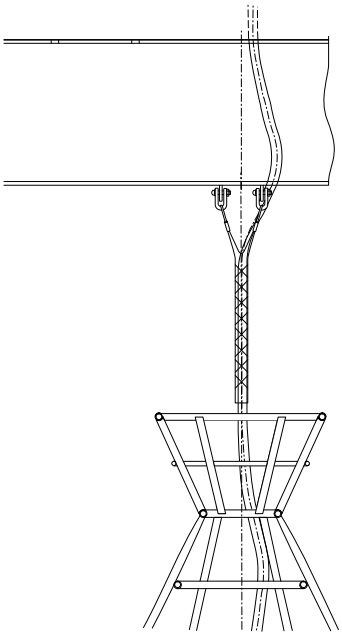

Before connecting the new cable, ensure that there is no voltage at the supply point of the E2 cubicle by measuring it.

9. Once the installation is complete, remove the manlift and switch on the power supply to the E2 cubicle terminals.
10. Test the spreader functionality with the new spreader cable. Ensure that the new cable coils into the spreader basket in the correct way. See also *Correcting a cable self-coiling problem*.

Copyright © (2016) Konecranes. All rights reserved.

Correcting a cable self-coiling problem

If there is a self-coiling problem with the spreader cable, carry out the appropriate correction procedure, depending on the problem.

Cable is not self-coiling into spreader basket

When installed correctly, make sure that the vertical length of the suspended cable has continuous twist over its full height between the trolley and the spreader. This is essential if the cable is to self-coil into the basket.
If the cable is not twisted enough, the cable does not self-coil correctly and tends to fall over outside of the spreader basket. The cable also forms "figure-of-eight" loops inside the basket.

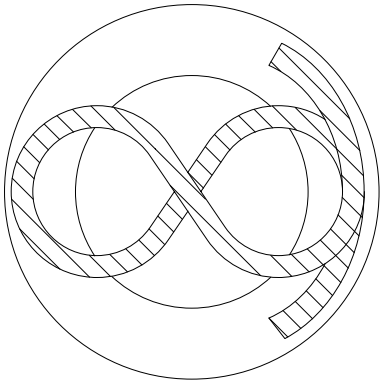

Figure 91. Figure-of-eight loop

To add extra twists into the spreader cable, carry out the following steps:

1. Position the spreader at maximum height.
2. Attach the temporary pulling rope to the braided sock to support the suspended weight of the cable, and then release the mechanical attachment shackles.
3. Rotate the spreader cable by one complete turn in an anti-clockwise direction (when viewed from above).
4. Refit the mechanical attachment shackles and remove the temporary rope.
5. Repeat the self-coiling test and make further corrections if necessary.

Copyright © (2016) Konecranes. All rights reserved.

Cable self-coiling into small turns

When installed with the correct amount of twist, make sure that the maximum turns must self-coil at the full diameter of the basket.
If the cable twists too much, it self-coils into small tight turns only in a part inside basket. It also forms loops in the vertical length of the suspended cable that "snag" in the neck of the basket.

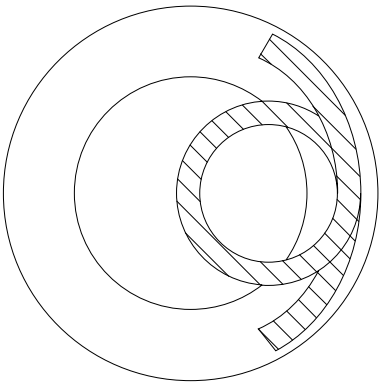

Figure 92. Excessive twist of the spreader cable

To remove excessive twist from the spreader cable, carry out the following steps:

1. Position the spreader at maximum height.
2. Attach the temporary pulling rope to the braided sock to support the suspended weight of the cable, and then release the mechanical attachment shackles.
3. Rotate the spreader cable by one complete turn in a clockwise direction (when viewed from above).
4. Refit the mechanical attachment shackles and remove the temporary rope.
5. Repeat the self-coiling test and make further corrections, if necessary.

4.14 Maintaining the diesel alternator set

For information on additional inspection requirements and detailed instructions, see the manufacturer's documentation.

4.14.1 Diesel alternator set maintenance schedule

Table 61. Diesel alternator set electrical maintenance schedule

Component	Maintenance task	500 h	1000 h	2000 h	4000 h (1 year)	Other interval/ Notes
Emergency stops	Visual and operational	x				
Main power supply cubicle	Visual	x				
Local control station and main isolation switches	Visual and operational	x				
Door limit switches	Visual and operational	x				

Copyright © (2016) Konecranes. All rights reserved.

Component	Maintenance task	500 h	1000 h	2000 h	4000 h (1 year)	Other interval/ Notes
Diesel room lightning	Visual	x				
Battery	Check the battery charge level and clean	x				
Battery switch	Visual and operational	x				
Fuel level sensor	Check for possible leakage	x				

Table 62. Diesel alternator set mechanical maintenance schedule

Component	Maintenance task	500 h	1000 h	2000 h	4000 h (1 year)	Other interval/ Notes
Diesel engine and transmission	Visual: Check for leakage	x				First inspection at 100 h
	Operational: noise; start and warm-up	x				First inspection at 100 h
	Cleaning, visual: check painting		x			
	Visual: Check hoses and cables, clamping		x			
Belts (V-ribbed or flat belt)	Visual check	x				First inspection at 100 h
	Replace			x		
Coolant	Check / refill	x				First inspection at 100 h
	Replace					Replace after 8000 h
Coolant overflow bottle	Visual check	x				First inspection at 100 h
Valve mechanism	Check the engine valve clearance (only by the service personnel authorized by the manufacturer)			x		First inspection at 1000 h
Fuel water separator	Inspect and drain the collection bowl of water and contaminations; clean					Remove drain water and contaminations daily or as often as seen necessary.

Copyright © (2016) Konecranes. All rights reserved.

Component	Maintenance task	500 h	1000 h	2000 h	4000 h (1 year)	Other interval/ Notes
Fuel water separator filter	Replace	x				
Fuel filters	Replace		x			
Air filter insert	Visual check	x				First inspection at 100 h
	Replace		x			
Air filter indicator	Visual: check status					100 h
Air filter safety cartridge	Check condition and replace if necessary	x				
Turbocharger	Inspection (only by the service personnel authorized by the manufacturer)				x	
Alternator	Visual, assembly	x				For the maintenance schedule of individual alternator components, contact the manufacturer.
Tank breather	Visual, cleaning	x				
Fuel tank	Check, cleaning				x	
Exhaust pipe	Visual	x				
Hoses	Check for leakages	x				
Fire extinguisher	Inspect and refill, see *Inspecting and refilling the fire extinguishers*	x				
Diesel room	Clean	x				

Copyright © (2016) Konecranes. All rights reserved.

Table 63. Diesel alternator set lubrication schedule

Component	Maintenance task	500 h	1000 h	2000 h	4000 h (1 year)	Other interval/ Notes
Engine oil	Replace; check the required oil type from the manufacturer's documentation	x				
Oil filter	Replace	x				
Diesel cabin door hinge	Lubricate (oil can)		x			

Table 64. Diesel alternator set structural maintenance schedule

Component	Maintenance task	500 h	1000 h	2000 h	4000 h (1 year)	Other interval/ Notes
Engine and generator mountings	Visual				x	
	Check bolt torque tightening				x	

4.15 Maintaining the motors

⚠ WARNING

CRUSHING OR ENTANGLEMENT HAZARD

Working without appropriate personal protective equipment (PPE) increases the risk of getting crushed by heavy machinery or tools. Loose clothing or jewelry could get caught on controls or pulled into moving parts. This could cause death or serious injury.

Do not wear garments with loose sleeves or accessory which might get entangled with the mechanical parts. Wear approved PPE.

⚠ WARNING

MOVING MACHINERY HAZARD

Moving or rotating machinery could cause accidents during the maintenance operations, which could lead to death or severe injury.

Lock off the supplies to all crane drives before maintenance work is started.

Before inspecting or servicing the motor, prevent the shaft from rotating by locking it and isolating the electrical power to the corresponding motors.

During the maintenance work, do not remove the motor while there is any external torque applied to the shaft.

Copyright © (2016) Konecranes. All rights reserved.

NOTICE

RISK OF MATERIAL DAMAGE

Unusual changes with motor could cause motor failure, machine malfunction, or property damage.

If there are unusual changes in the motor functionality, disconnect power supply immediately. To prevent the motor suffering further damage, report any unusual changes, such as abnormal vibration or noise, to the person concerned or to the customer service department in order.

4.15.1 Maintenance schedule for motors

Table 65. Motor maintenance schedule

Component	Maintenance task	500 h	1000 h	2000 h	4000 h (1 year)	Other interval/ Notes
Gantry traveling motor (MF18XR200-181GB5027EHIP55) x 4						
	Check mounting and cabling				x	
	Check the surface of the cooling ribs. Clean if necessary.				x	
	Check drain holes. Clean if necessary.				x	
	Check for possible alarms for overheating					Monitor possible overheating alarms on the operator panel daily.
	Listen to the operating noise			x		
	Check vibration				x	
	Measure insulation resistance				x	
Pivot locking (swivel lock) motor (MT06LA400-132A85001-HIP55) x 4						
	Check mounting and cabling				x	
	Check drain holes. Clean if necessary.				x	
	Listen to the operating noise			x		
Trolley traveling motor with an encoder (MF11XM200-164GC5091XRIP55) x 1 **Trolley traveling motor without an encoder (MF11XM200-164GC5092XRIP55) x 3**						
	Check mounting and cabling				x	

Copyright © (2016) Konecranes. All rights reserved.

Component	Maintenance task	500 h	1000 h	2000 h	4000 h (1 year)	Other interval/ Notes
	Motor equipped with an encoder: check encoder mounting and cabling				x	
	Check the surface of the cooling ribs. Clean if necessary.				x	
	Check drain holes. Clean if necessary.				x	
	Check for possible alarms for overheating					Monitor possible overheating alarms on the operator panel daily.
	Listen to the operating noise			x		
	Check vibration				x	
	Measure insulation resistance				x	
	Check the operation of the cooling fan				x	
Hoisting machinery motor (MT18XR200A180GD5006NRIP55) x 2						
	Check mounting and cabling				x	
	Check encoder mounting and cabling				x	
	Check the surface of the cooling ribs. Clean if necessary.				x	
	Check drain holes. Clean if necessary.				x	
	Check for possible alarms for overheating					Monitor possible overheating alarms on the operator panel daily.
	Listen to the operating noise			x		
	Check vibration				x	
	Measure insulation resistance				x	
	Check the operation of the cooling fan				x	
Skew machinery motor (MF10X-200-154B62035EHIP55) x 1						

Copyright © (2016) Konecranes. All rights reserved.

Component	Maintenance task	500 h	1000 h	2000 h	4000 h (1 year)	Other interval/ Notes
	Check mounting and cabling				x	
	Check encoder mounting and cabling				x	
	Check the surface of the cooling ribs. Clean if necessary.				x	
	Check drain holes. Clean if necessary.				x	
	Check for possible alarms for overheating					Monitor possible overheating alarms on the operator panel daily.
	Listen to the operating noise			x		
	Check vibration				x	
	Measure insulation resistance				x	

4.15.2 Motor assemblies

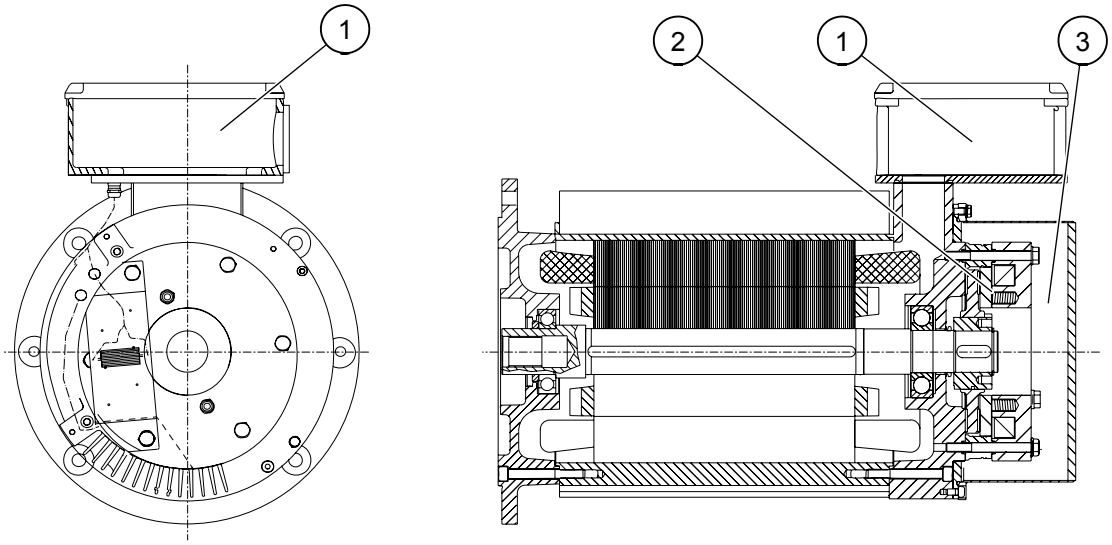

Figure 93. Gantry traveling motor (MF18)

1. *Terminal box*
2. *Brake assembly*
3. *Brake cover*

Copyright © (2016) Konecranes. All rights reserved.

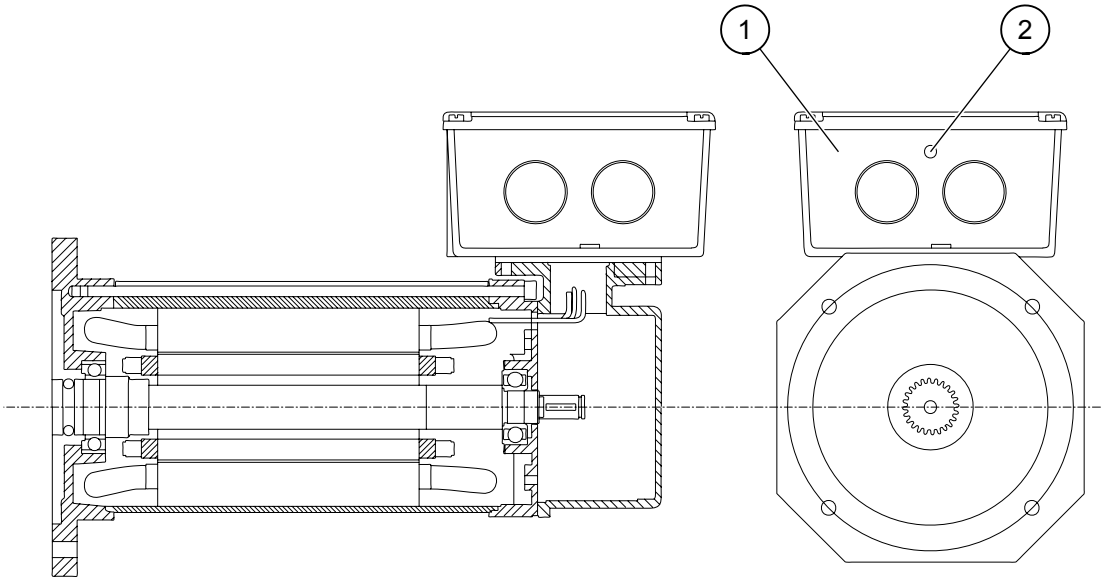

Figure 94. Pivot locking device (swivel lock) motor (MT06)

1. *Terminal box*
2. *Drain hole*

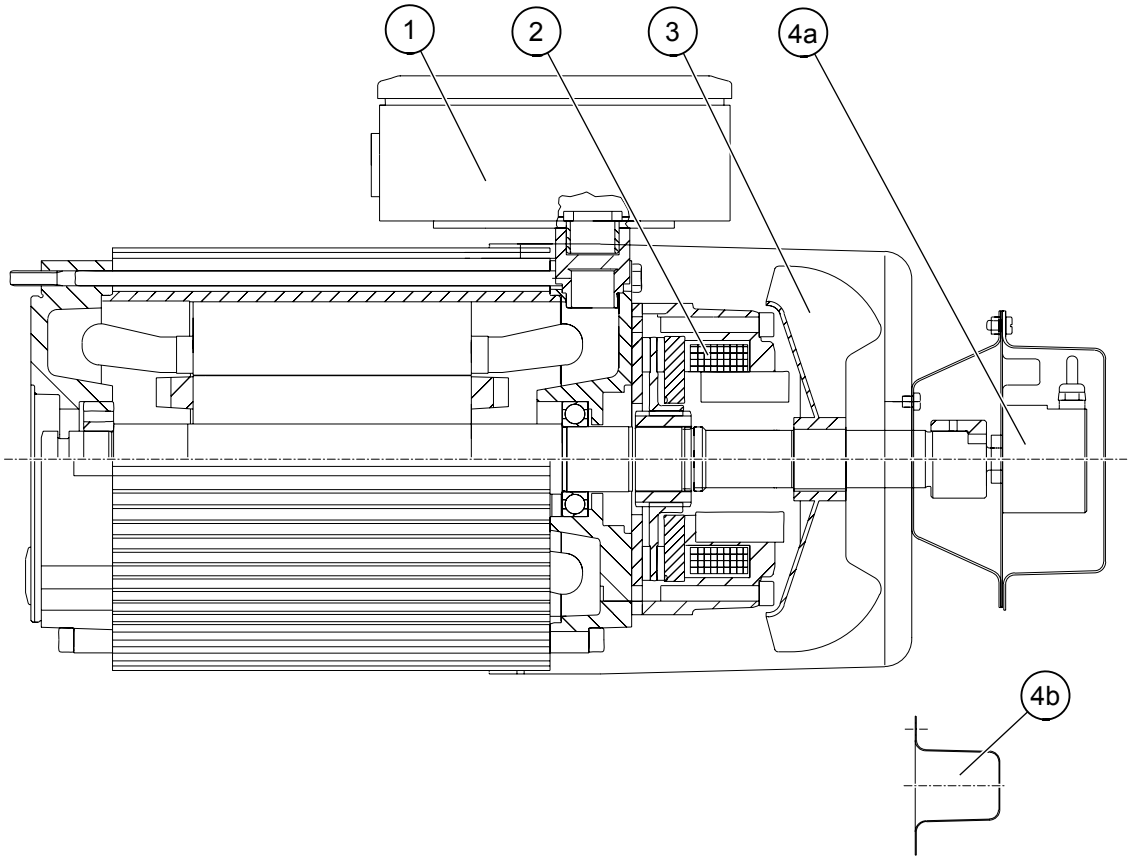

Figure 95. Trolley traveling motor (MF11)

1. *Terminal box*
2. *Brake assembly*
3. *Cooling fan*
4. *4a: Incremental encoder with covers; 4b: Cover without an encoder*

Copyright © (2016) Konecranes. All rights reserved.

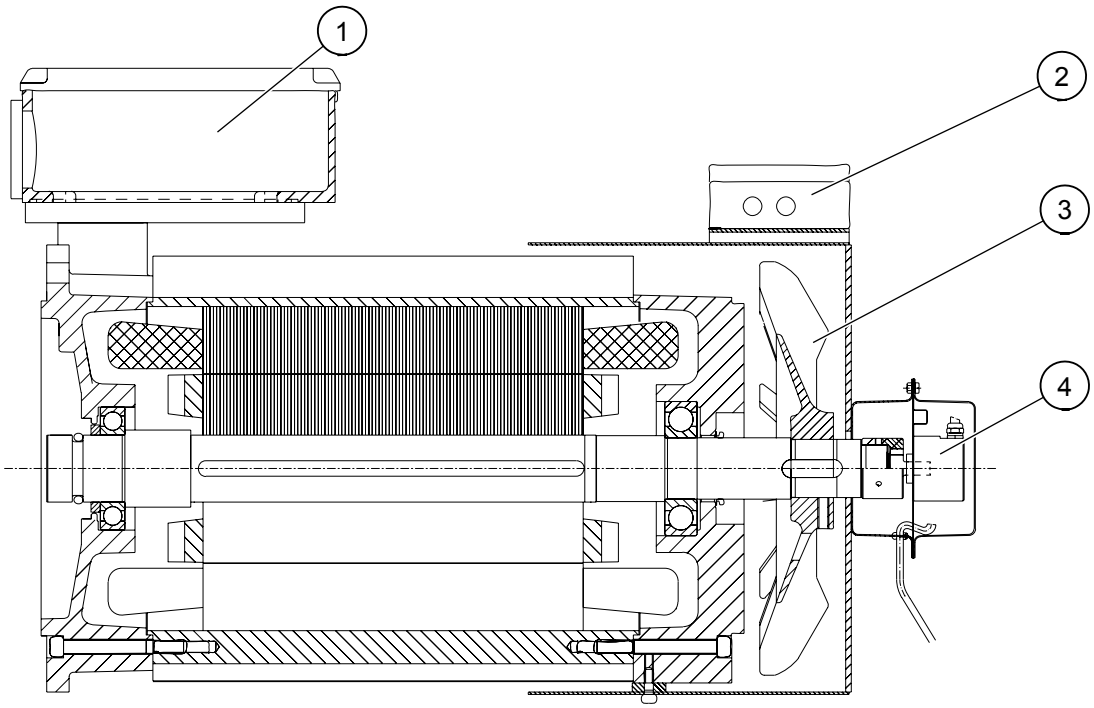

Figure 96. Hoisting machinery motor (MT18)

1. *Terminal box*
2. *Encoder junction box*
3. *Cooling fan*
4. *Incremental encoder*

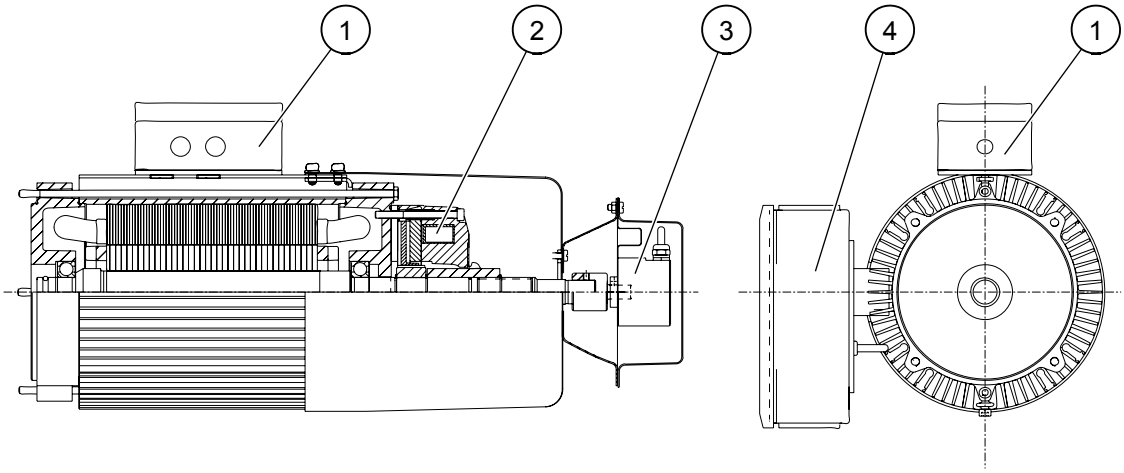

Figure 97. Skew machinery motor (MF10)

1. *Encoder junction box*
2. *Brake assembly*
3. *Incremental encoder*
4. *Terminal box*

4.15.3 Inspecting the motors visually

Check the following issues on a motor without disassembly:

Copyright © (2016) Konecranes. All rights reserved.

1. Check that the covers are properly in place and there are no loose or missing bolts or fixing screws. Tighten the bolts and screws if necessary.
2. Check the condition of the cables and that they are properly connected.
3. If the motor has an encoder, check the encoder mounting and the cable between the encoder and the encoder junction box.
4. Check that the surface of the cooling ribs is clean. Clean if necessary.
5. Check that the drain holes at the bottom of the motor are free of dirt. Clean if necessary.

4.15.4 Operational checks for the motor

Check the following issues regularly when a motor is running:

- **Overheating:** check for possible alarms or faults due to motor overheating, and find out the cause for the overheating. Excessive dirt or bad ventilation may also be a reason for the high temperature.
- **Operating noise:** a loud growling sound from the motor indicates that the connection is faulty, and the motor must be stopped immediately. Distinct rattling sound usually indicates damaged bearings that must be replaced. Exceptional noise in the motor may also indicate that the encoder is wrongly mounted on the motor shaft. Check and correct always the encoder mounting as the encoder gets easily damaged. For more information, see Measuring the shaft end run out before the encoder installation (page 254).
- **Vibration:** the cause of any exceptional vibration in the motor must always be clarified. See also Troubleshooting exceptional vibration (page 252).
- **Motor windings:** measure the insulation resistance (for instructions, see Measuring insulation resistance (page 251).) Too low resistance may indicate a dirty or damaged winding. In this case, contact the manufacturer.
- **Motor equipped with a cooling fan:** check that the cooling fan works properly, and the rotors and surface ribs are clean.

4.15.5 Measuring insulation resistance

The most convenient method of evaluating the condition of the insulation is to measure the insulation resistance. When the winding is clean and dry, the insulation resistance is high. A low insulation resistance value is usually the result of dampness or dirt.

The stator winding may be damp due to transportation conditions or storage of the motor in a cold, damp or poorly ventilated location for a long time. Therefore, the condition of the insulation must be checked before the installation.

Measure the insulation resistance with a 1000 Vmega-ohm meter. Take the reading when the test voltage of the meter has been connected to the winding for approximately one minute.

The insulation resistance for a cool winding (+10°C... +40°C or 50°F...104°F) must be minimum 5 MΩ. The insulation resistance for a warm winding (over 40°C or 50 F) should be minimum 1 MΩ. If the insulation resistance value is lower than the minimum set value, the motor must be dried out.

The drying process is controlled by heat and ventilation. Drying must be controlled in the following manner:

Copyright © (2016) Konecranes. All rights reserved.

- Use a heater fan to blow hot air (approximately 100°C or 212°F) onto the windings inside the motor.
- Windings may be dried in an oven at a temperature of approximately 90°C or 194°F provided that there is a reasonable ventilation. If the temperature is increased slowly, the evaporation of the moisture does not damage the windings.
- Initially, as the temperature of the damp winding increases, the insulation resistance decreases. However, as drying continues, the resistance will start to increase. Drying may be stopped when the resistance value remains same.
- If the winding is dry and the insulation resistance is still too low, the winding is dirty or damaged. Dusty winding must be cleaned carefully. Winding must be washed by a specialist.

4.15.6 Troubleshooting exceptional vibration

If there is exceptional vibration in the motor, determine the cause in the following manner:

1. Unmount the motor from the machinery.

WARNING! UNCONTROLLED MOVEMENT HAZARD

Starting or stopping could cause a suspended equipment to move or operate in an uncontrolled manner. This could lead to death, severe personal injury, or property damage.

Do not start or stop the motor while it is suspended.

2. Start the motor while it is on the bed plate and lift it from the lifting eye.
3. If the motor no longer vibrates, possible causes of the vibration are:
   - Twisted bed plate.
   - Misalignment or eccentricity between the shafts.
   - Defect in the machinery.
4. If the motor continues to vibrate while suspended:
   4.1 Remove the coupling.
   4.2 Place a full-length key in the keyway and secure it with an adhesive tape.
   4.3 Repeat the test procedure described in the previous step.
   If the motor continues to vibrate, there is an imbalance in the rotor. If the motor does not vibrate, there is an imbalance in the coupling.

4.15.7 Maintaining the encoders

Incremental encoder assembly

Incremental encoder is a precision device coupled to the motor shaft. Encoder produces pulse waves (normally 600 pulses per revolution) that are used for measuring the rotation speed of the motor. Incremental encoders are used in closed-loop motors equipped with frequency converters.

Copyright © (2016) Konecranes. All rights reserved.

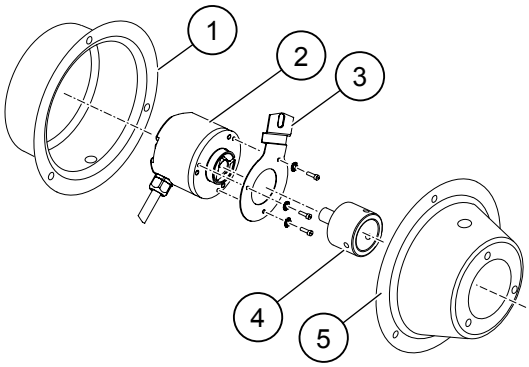

Figure 98. Incremental encoder assembly

1. *Encoder top cover*
2. *Incremental encoder*
3. *Torque support*
4. *Coupling adapter*
5. *Encoder bottom cover*

Disassembling an incremental encoder

1. Switch off the power supply to the motor. Ensure that there is no danger of live voltage.
2. Remove the encoder top cover by loosening the fixing screws (1).

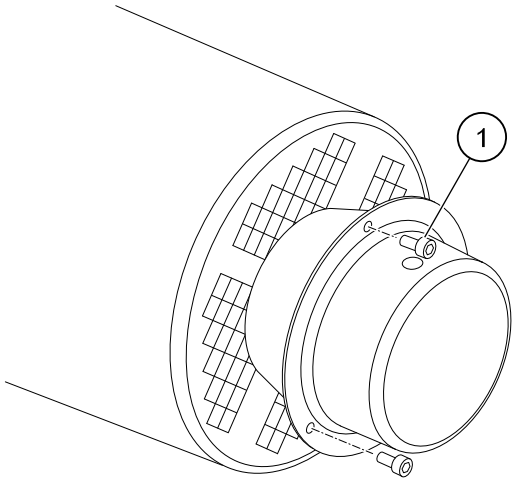

3. Loosen the collar (3) screws of the encoder and remove the encoder (2):

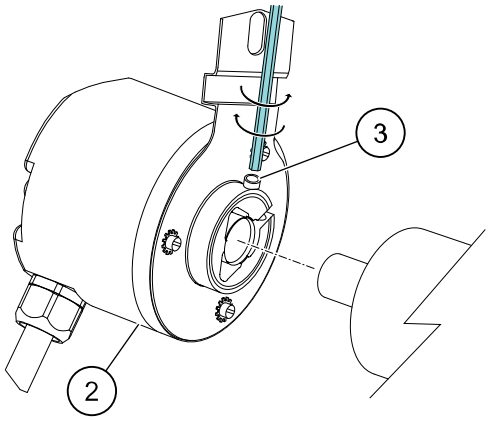

Copyright © (2016) Konecranes. All rights reserved.

4. If a coupling adapter is in use, loosen the three M6 screws around the coupling adapter and remove the adapter from the end of the motor shaft. If the coupling adapter does not come off by hand, use pullout screws: tighten the pullout screws little by little until the coupling adapter comes off the motor shaft.
5. Unscrew and remove the bottom cover of the encoder.
6. Remove the cabling between the encoder and the encoder junction box.

Measuring the shaft end run out before the encoder installation

If the previous encoder has been damaged and no reason for the damage is known, measure the shaft end run out before installing a new encoder.

NOTE ***When the motor is equipped with a separate coupling adapter, the coupling adapter becomes as an extension shaft for the encoder.***

Motor without a separate coupling adapter:

1. Check with a dial gauge that the run out (A) of the rotor surface in relation to the bearing surfaces is not greater than 0.03 mm (0.001 in).

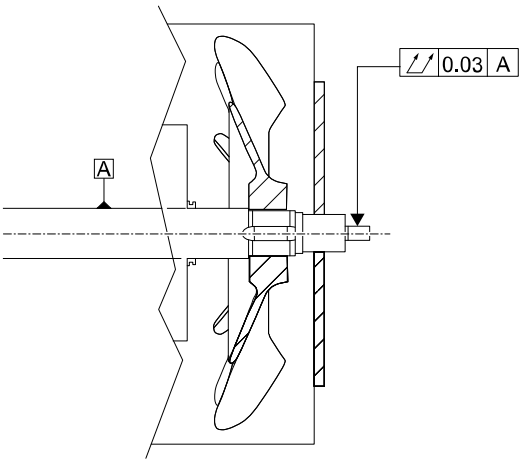

If the run out is greater than 0.03 mm, the shaft rotor must be straightened before the encoder installation.

Motor with a coupling adapter:

2. Before mounting the coupling adapter, check that the run out of the rotor surface in relation to the bearing surfaces is not greater than 0.03 mm (0.001 in). The same run out limit applies for the shaft end:

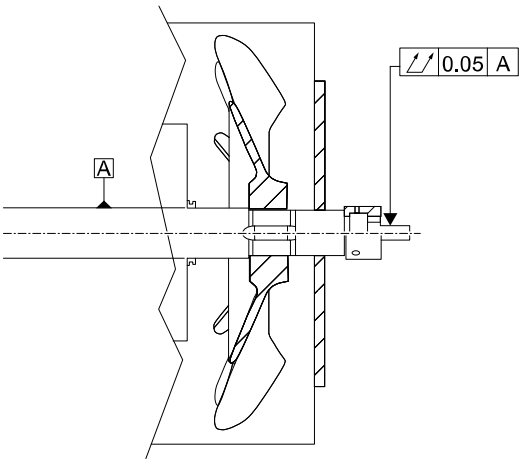

Copyright © (2016) Konecranes. All rights reserved.

3. After mounting the coupling adapter, check the run out of this extension shaft. Maximum allowed run out (A) for the shaft is 0.05 mm (0.002 in). If the extension shaft run-out is greater than 0.05 mm, straighten, remount, or change it.

Reassembling an incremental encoder

NOTICE

MACHINE MALFUNCTION HAZARD

The sensitive reading disc inside the encoder may get damaged if too much axial force is applied.

Do no use force in the encoder installation.

NOTICE

MACHINE MALFUCTION HAZARD

Mechanical load or sharp bends on the encoder cable may cause damage to the encoder cable or the encoder itself.

Install the encoder cable in such a way that it does not cause any mechanical load towards the encoder. Ensure that the encoder cable is not bent sharply.

NOTICE

MACHINE MALFUNCTION HAZARD

a short distance between the motor and encoder cables could cause disturbance to the encoder operation. Disturbances may damage the encoder.

Ensure that the distance between motor and encoder cables is 20 cm (7.9 in) at the minimum.

1. Switch off the power supply to the motor. Ensure that there is no danger of live voltage.
2. If the motor is equipped with a coupling adapter, mount the adapter as an extension shaft for the encoder and tighten it with 3 screws little by little. Tightening torque is 8.5 Nm. After the installation, check the run out of the extension shaft. For more information, see *Measuring the shaft end run out before the encoder installation.*
3. Install the bottom part of the encoder cover to the motor cover with three screws.
4. Install the torque support to the encoder.

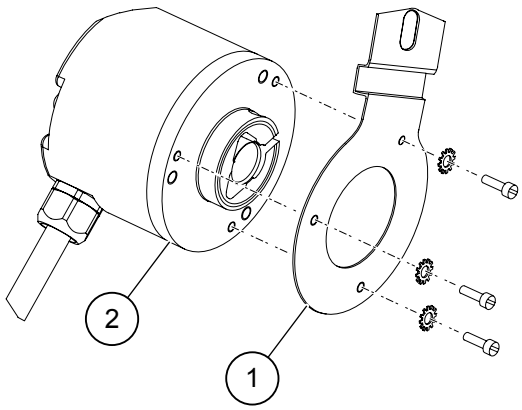

The torque support (1) is not pre-installed on the encoder (2) by the manufacturer. Mount the support with three screws and serrated washers. Tightening torque for the screws is 2.5 Nm.

NOTICE

MACHINE MALFUNCTION HAZARD

Wrongly installed torque support causes a continuous radial force (which causes overheating) towards the bearings of the encoder. The encoder bearings may get damaged.

Install the torque support so that it causes a minimal load to the encoder. The support must be straight, not bent. Tighten the support screws carefully.

Copyright © (2016) Konecranes. All rights reserved.

5. Install the encoder onto the motor shaft or onto the extension shaft (coupling adapter) manually.

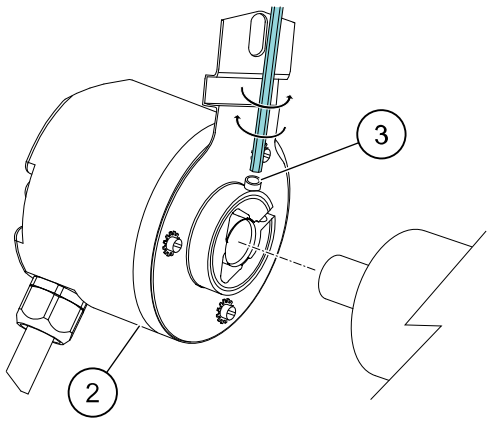

Install the encoder (2) in such way, that the shaft goes all the way into the encoder. Then pull out the encoder 1...2 mm (0.04...0.08 in).

Attach the encoder firmly to the shaft by tightening the collar screws (3) with key SW2. Tightening torque is 1.5 Nm. Use also a thread-locking compound (soft or medium, which enables also reopening) to secure the tightening.

NOTE ***The maximum allowed radial movement of an installed encoder is 0.1 mm (0.004 in) (measured from the encoder body).***

6. Thread the encoder cable through the hole in the encoder top cover and fix the cover with three screws.
7. Install the encoder cable to the encoder junction box.
   The encoder cable must be a shielded round cable. Use 360° shield grounding.

NOTE ***Ensure that the cable shield grounding to the junction box is made so that the claws of the cable gland are in touch with the shielding of the cable.***

8. Connect the wiring inside the encoder junction box according to the instructions in the encoder sticker.

4.15.8 Replacing the motor

Installing a new motor

⚠ WARNING

LIFTING HAZARD

Lifting heavy motors manually may cause serious personal injury.

Do not lift heavy motors manually. Use the lifting eye bolt on the stator frame or two lifting slings placed under the stator frame.

Preparing for the motor installation:

1. Inspect the motor immediately upon receipt. Verify that there is no damage due to transport.
2. Verify that the motor data plate values correspond to the order. Verify that the power supply is compatible with the values specified on the data plate.
3. If the motor is stored for a while before the installation, store it indoors at room temperature. This keeps the motor insulation dry.

NOTE ***If the motor is stored for more than six months, the manual rotation of the motor shaft is recommended every two months. The rotation distributes the oil in the bearing grease.***

Copyright © (2016) Konecranes. All rights reserved.

4. Make sure that the motor rotor rotates freely. Ensure that all temporary transport supports for the bearings have been removed.
5. Check the condition of the insulation resistance. Check the insulation a few days before the motor is taken into use, as the winding may need drying.

Installing the motor:

6. If there are drain holes in the motor, mount the motor in the position specified on the data plate.
7. Use solvent to clean the shaft ends and the contact faces of the flanges. Shaft ends and the contact faces of the flanges have been treated against corrosion.

NOTICE

MACHINE MALFUNCTION HAZARD

Motor bearings may easily get damaged during installation.

Do not let the solvent penetrate the bearings. Do not hammer or strike the shaft of the motor during mounting.

8. When mounting the motors, ensure the correct tightening torque for the bolts.
9. Connect the motor to the main supply via the terminal box. The location of the terminal box depends on the motor type.
   9.1 Check from the motor data plate whether the connection type is Y or D.
   9.2 Ensure from the terminal box that the positions of terminal board strips correspond to the connection type stamped on the data plate.
   9.3 Connect the motor to the main supply via the terminal box according to the connection type.

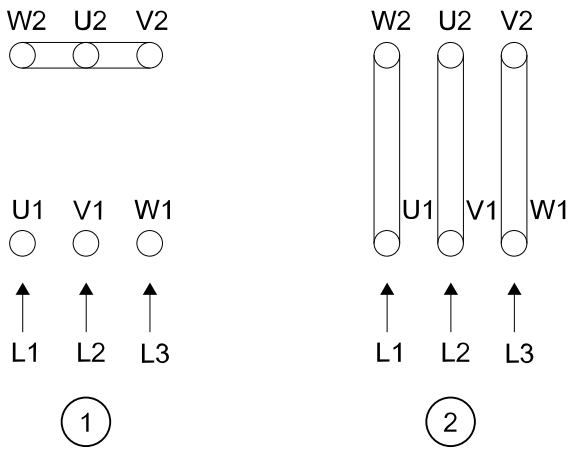

1. Y-Connection
2. D-Connection

Starting a new motor

When starting a new motor:

1. Make sure that the motor rotates freely. Remove all the temporary transport supports for the bearings, if any.
2. Check the direction of rotation of the motor. The direction of rotation reverses by interchanging any two main supply wires which connect to the pole screws (U1, V1, W1) of the motor.
3. Make sure that the direction of rotation of the motor corresponds to the direction of the control commands. Symmetrically installed traveling machinery units operating on different rails have opposite directions of rotation.

Copyright © (2016) Konecranes. All rights reserved.

4. Check operating noise. A loud growling sound from the motor indicates that the connection is faulty. In this case, stop the motor immediately.
5. During operation, the bearings must make a humming sound. Distinct rattling sound arises from a damaged bearing. Stop the motor immediately and contact the manufacturer or the supplier for the bearing replacement.
6. Check the vibration and determine the cause of any exceptional vibration.
7. Check load condition (recommendation). Measure the stator current from each phase. Measure the speed of rotation with a tachometer or by slip measurement. Compare the values that obtained with the values specified on the motor data plate.
8. During the operation, check possible alarms on the motor temperature. In case of motor overheating, stop operating the motor immediately, and contact the manufacturer or the supplier for finding out the cause for the overheating.

4.16 Maintaining the mechanical disc brakes

For information on additional inspection requirements and detailed instructions, see the manufacturer's documentation.

4.16.1 Safety during the brake maintenance

Before performing any maintenance work on the brakes, take the following safety precautions:

⚠ WARNING

SPECIALIST SKILLS REQUIRED

Incompetent operation and maintenance procedures could cause death or severe injuries.

Operation and maintenance procedures require professional skills and special training regarding the tasks and working methods.

Incorrectly maintained brakes can be dangerous. For this reason, only trained personnel may open and maintain the brake. Only a qualified electrician may replace electrical components such as the solenoid coil and the proximity switches.

⚠ WARNING

MOVING MACHINERY HAZARD

Moving or rotating machinery, for example, the rotating shaft, could cause accidents during the maintenance operations, which could lead to death or severe injury.

Lock off the supplies to all crane drives before maintenance work is started. Stop the diesel alternator set.

Do not release the brake while there is any external torque applied to the shaft.

⚠ WARNING

STRONG MAGNETIC FIELD HAZARD

Near the hoist brake, strong electromagnetic fields are produced when the solenoid coil is energized.

The magnetic field could cause implanted heart pacemakers and cardioverter defibrillators to cease operation.

Persons with pacemakers or implants must avoid the area of the hoist brake in any event.

Do not leave objects, especially metal, lying around near the hoist brake.

Copyright © (2016) Konecranes. All rights reserved.

⚠ WARNING

LIFTING HAZARD

The hoist brake assembly weighs 75 kg and may cause death or severe personal injury if unmounted without a proper lifting device.

Use a suitable lifting device for lifting the hoisting machinery unit components.

⚠ WARNING

CRUSHING OR ENTANGLEMENT HAZARD

Working without appropriate personal protective equipment (PPE) increases the risk of getting crushed by heavy machinery or tools. Loose clothing or jewelry could get caught on controls or pulled into moving parts. This could cause death or serious injury.

Do not wear garments with loose sleeves or accessory which might get entangled with the moving parts.

When carrying out work on the brake, heavy tools are used. Therefore, pay attention to the particular possible crushing points when:

- Using tools
- Fitting and removing the brake, accessories, or spare parts
- Unbolting the brake from the pallet

Before any maintenance work

Lower the spreader onto the ground (or onto the top of a container) and slacken the wire ropes. This is to ensure that most of the torque is removed from the hoist brake shaft.

NOTICE

RISK OF MATERIAL DAMAGE

Unusual changes to the brake could cause property damage and there is a risk of accident.

If there are unusual changes in the brake functionality (for example, a burning smell from the friction linings), switch off the crane power supply immediately. Report the problem immediately to the maintenance supervisor.

To prevent the brake from suffering further damage and to avoid any risk of an accident, do not operate the crane until the problem has been rectified.

Do not use any grease or oil

The brake is designed for dry-running operation. Use grease or oil during the installation of the brake. Greases and oils reduce the braking action. In particular, the brake hub must not be oiled or greased.

Protect the brake assembly parts

Dirt, oil, and spray water reduce the braking capacity. For example, the friction linings, brake flange, and armature plate must be protected when the brake cover is removed.

Copyright © (2016) Konecranes. All rights reserved.

4.16.2 Maintenance schedule for mechanical disc brakes

Table 66. Maintenance schedule for mechanical disc brakes

Component	Maintenance task	500 h	1000 h	2000 h	4000 h (1 year)	Other interval/ Notes
Trolley traveling brakes (NM38740NR2) and skew machinery brake (NM38730NR2)						
Brake assembly	Clean the brake with compressed air				x	
Brake disc	Measure the brake disc thickness				x	
	Replace					Replace the brake disc when the brake disc thickness is less than the minimum value given in the technical data table.
Hub	Inspect; replace				x	Replace the hub always when the brake disc is replaced.
Friction disc	Inspect; replace if distorted or otherwise damaged				x	
Brake cable	Check that the brake cable is connected properly to the terminal box				x	
Hoisting machinery brake (NM40445NR2)						
Brake assembly	Clean the brake with compressed air				x	
Brake disc (x 2)	Measure the brake disc thickness				x	Measure the brake disc thickness also when the microswitch is raising an alarm.
Brake assembly	Measure the air gap; adjust if necessary	x				Adjust the air gap if not within the limits given in the technical data table.

Copyright © (2016) Konecranes. All rights reserved.

Component	Maintenance task	500 h	1000 h	2000 h	4000 h (1 year)	Other interval/ Notes
Microswitch for wear detection	Check for operation					Check the alarms daily (if the microswitch is sending false alarms, replace the whole brake assembly).
Microswitch for brake release	Check for operation					Check the alarms daily (if the microswitch is sending false alarms, replace the whole brake assembly).
Brake assembly	Measure the brake coil resistance				x	Measure the brake coil resistance also when the brake is not properly released.
Brake cable	Check that the brake cable is connected properly to the terminal box				x	
Gantry traveling brake (NM40830NR2)						
Brake assembly	Clean the brake with compressed air				x	
Brake assembly	Measure the air gap (= the brake disc thickness)			x		
	Replace the brake disc					Replace the brake disc when the maximum air gap of 1.6 mm has been reached.

Copyright © (2016) Konecranes. All rights reserved.

4.16.3 Brake assemblies

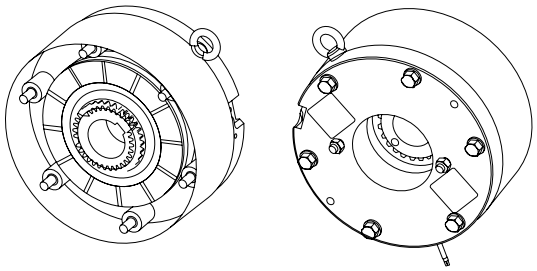

Figure 99. Gantry traveling brake (NM40830NR2)

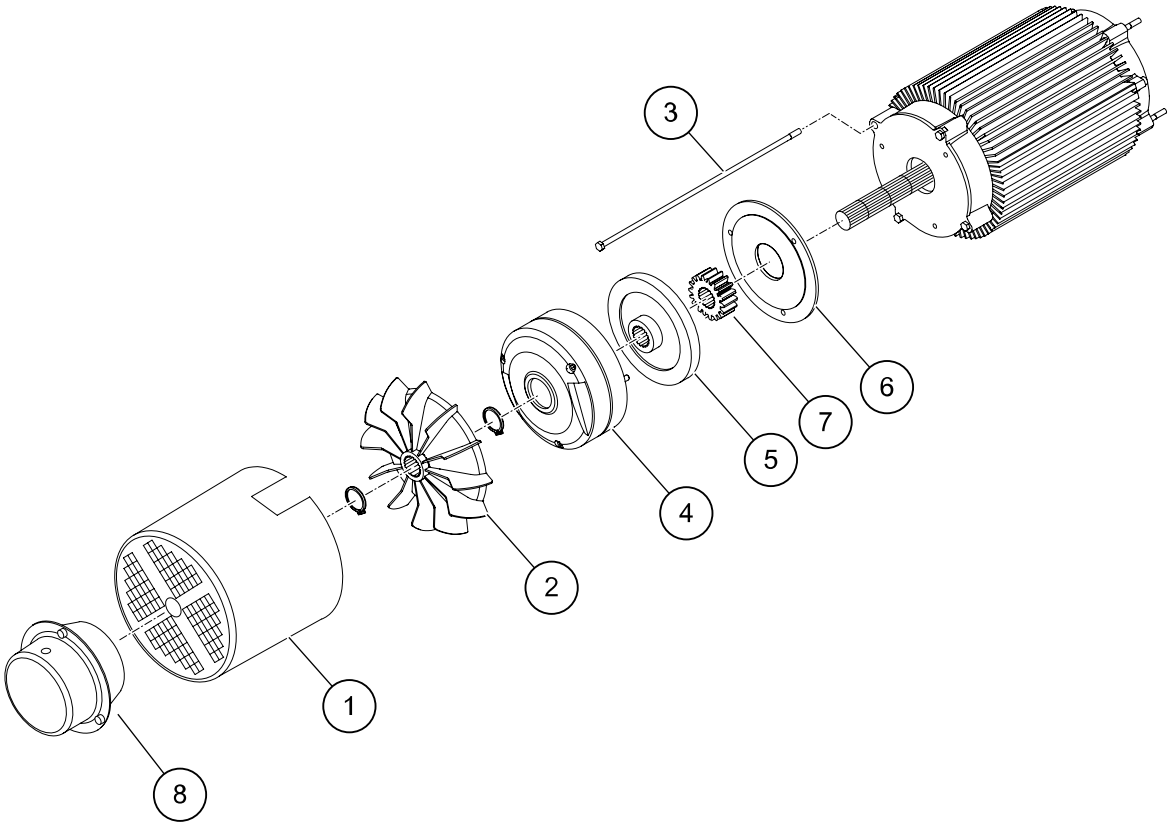

Figure 100. Trolley traveling machinery / skew machinery motor and brake (NM387-series) assembly

1. *Cover*
2. *Fan (note that the skew machinery motor does not have a fan inside the cover)*
3. *Fixing screw for the motor (x 4)*
4. *Coil body assembly*
5. *Brake disc*
6. *Friction disc*
7. *Brake hub*
8. *Incremental encoder*

Copyright © (2016) Konecranes. All rights reserved.

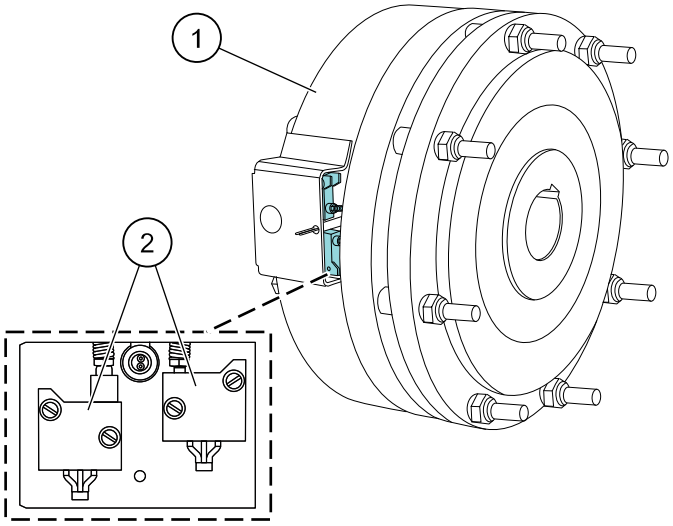

Figure 101. Hoisting machinery brake (NM40445NR2)

1. *Brake assembly*
2. *Microswitches (for wear detection and brake release)*

4.16.4 Maintaining the trolley traveling brakes and the skew machinery brake

Measuring the brake disc thickness

1. Disassemble the brake. For disassembly instructions, see Disassembling the brake (page 265).
2. Check the brake type on the data plate that is fixed to the brake.
3. Using a suitable caliper, measure the thickness of the brake disc at several points around the circumference.

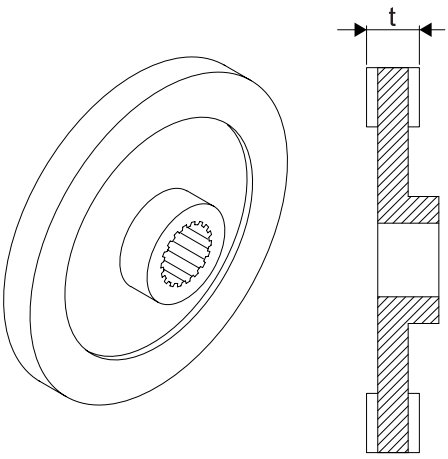

4. If the thickness (t) is less than the minimum value (see *Technical data for the NM387-series brakes*), replace the brake disc.
5. Check the condition of the teeth on the brake disc. If the brake disc torsional backlash on the hub is greater than the maximum permitted value given in the table below, replace the brake disc.

Copyright © (2016) Konecranes. All rights reserved.

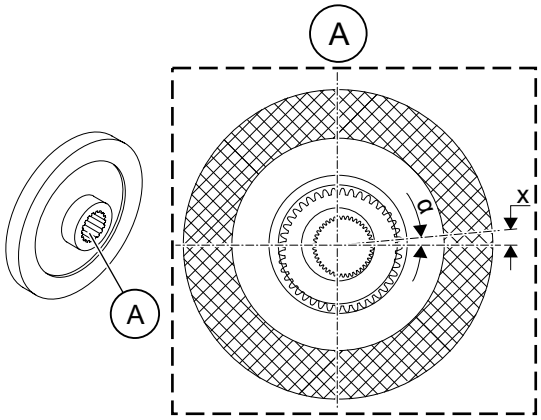

Motor size	Backlash (X)
MF07-MF10	0.5°
MF11-MF13	0.3°

6. If the brake disc needs replacing, replace also the brake hub. A new hub is included in the spare part kit for the brake.
7. Check that the friction disc is not bent. If the friction disc is bent more than 0.05 mm or there is excessive scooring on its surface, replace it.

Replacing the hub

1. Before removing the old hub, remove the sleeve, retaining ring, and O-ring from the motor shaft using the following procedure:
   1.1 Using external retaining ring pliers, remove the retaining ring (retaining the sleeve) from the motor shaft.
   1.2 Pull off the sleeve axially from the motor shaft.
   1.3 Remove the O-ring from the motor shaft.
2. Remove the old hub using the following steps:
   2.1 Using external retaining ring pliers, remove the retaining ring (retaining the hub) from the motor shaft.
   2.2 Pull off the old hub axially from the motor shaft and discard it.
3. Fit the new hub using the following steps:
   3.1 Align the splines inside the new hub with the splines on the motor shaft and push the new hub fully onto the motor shaft.
   3.2 Using external retaining ring pliers, refit the retaining ring onto the shaft to retain the hub. Make sure that the retaining ring seats correctly in its slot.
4. Refit the sleeve, retaining ring, and O-ring using the following steps:
   4.1 Refit the O-ring onto the motor shaft.
   4.2 Push the sleeve fully onto the motor shaft.
   4.3 Using external retaining ring pliers, refit the retaining ring onto the shaft to retain the sleeve. Make sure that the retaining ring seats correctly in its slot.

Copyright © (2016) Konecranes. All rights reserved.

Cleaning the brake

WARNING! DUST HAZARD

Exposure to dust could cause respiratory problems and eye irritation.

To prevent the inhalation of abrasive brake dust, always wear a face mask while cleaning the brake.

If compressed air is used to blow away the dust, wear safety goggles to protect the eyes from the abrasive brake dust.

1. Disassemble the brake. For disassembly instructions, see Disassembling the brake (page 265).
2. Use a vacuum cleaner or a brush to remove dust from inside the coil body, from the armature plate, brake disc, and friction disc.

Disassembling the brake

WARNING

STRONG MAGNETIC FIELD

Magnets can impact the functioning of pacemakers, implanted heart defibrillators, and hearing aids.

If you wear these devices, follow precautions that are associated to magnetic forces.

1. Switch off the power supply to the motor and brake. Ensure that there is no danger of live voltage.
2. Remove the encoder (if the motor is equipped with an encoder), fan cover, and fan (if the motor is equipped with a fan). See *Disassembling an incremental encoder*.
3. Disconnect the brake coil cable from the terminal and pull the cable out of the terminal box through the cable gland.

NOTE ***This step is necessary only when the brake is being replaced. If the brake is disassembled for inspection or cleaning, the brake coil cable does not need to be detached.***

4. Using the correct size of metric Allen wrench, loosen the fixing screws of the brake (11) evenly and in sequence.

NOTE ***Do not try to use a similar sized imperial Allen wrench, it could damage the screw heads.***

5. Supporting the weight of the brake, remove the fixing screws (11) and pull off the coil body assembly (4) axially from the end of the motor.

Copyright © (2016) Konecranes. All rights reserved.

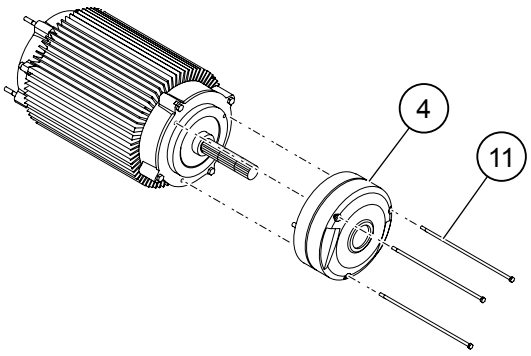

6. Pull off the brake disc (5) and friction disc (6) from the hub on the motor shaft.

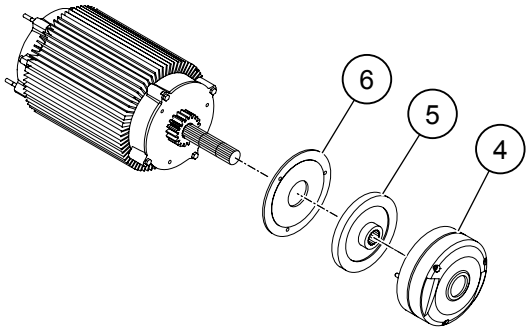

7. Remove the hub. For instructions, see Replacing the hub (page 264).

NOTE ***This step is necessary only when the brake is being replaced. If the brake is disassembled for inspection or cleaning, the brake hub does not need to be removed.***

Disassemble the coil body assembly (4):

8. Place the coil body assembly (4) on a workbench with the armature plate (7) at the top.

NOTE ***Make note of where the cut-out notches in the armature plate are located relative to the lugs in the coil body and the screws. Mark the corresponding positions of these components to assist the reassembly.***

9. Slowly and evenly, remove the shoulder screws (9) that retain the armature plate (7) inside the coil body (10).

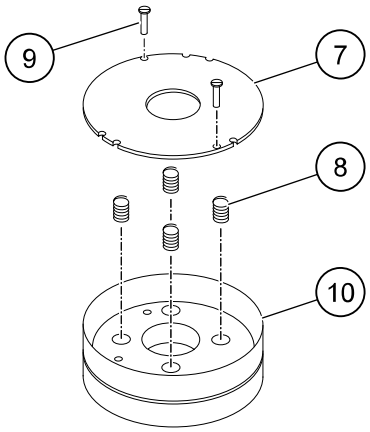

NOTICE

RISK OF BRAKE DAMAGE

If the coil body assembly is disassembled incautiously, the springs relax immediately and fall out in an uncontrolled manner.

Be careful with the armature plate and springs when disassembling the coil body assembly as each spring must be placed into its original indent in the reassembly.

Copyright © (2016) Konecranes. All rights reserved.

10. Lift the armature plate (7) carefully out from the coil body (10), without disturbing the springs (8) at this stage.
11. Record the position of each spring (8) and remove the springs from the coil body (10).

Reassembling the brake

1. Install the springs (8) into their correct indents in the coil body (10).
   Make sure that no springs are broken. If any of the springs are broken the brake has to be replaced.
2. Position the armature plate (7) inside the coil body (10) in the same alignment as it was before removal.
3. Refit the shoulder screws (9) through the holes in the armature plate (7). Tighten the screws slowly and evenly up to their shoulder. Do not overtighten the screws.

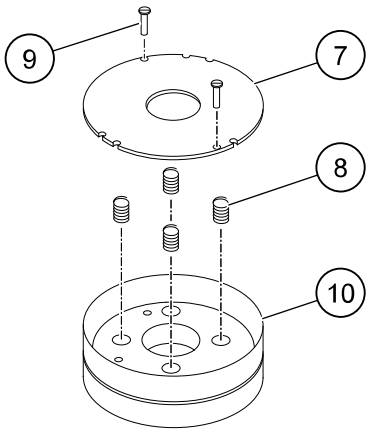

4. If the brake hub has been removed, refit it. For instructions, see Replacing the hub (page 264)
5. Install the friction disc (6).
   There are two diffrent types of friction discs:

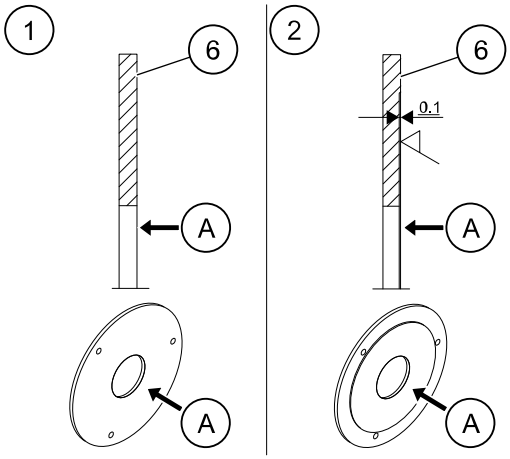

   - A = brake disc side
6. Align the teeth on the brake disc (5) with the teeth on the hub and push the brake disc (5) onto the hub.

Copyright © (2016) Konecranes. All rights reserved.

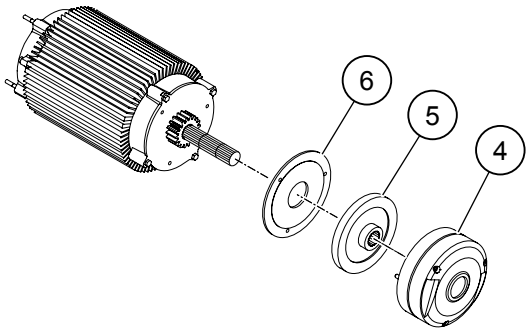

7. Fit the coil body assembly (4) onto the motor:
   7.1 Insert the O-ring into the groove of the coil body (only in IP66 motors)
   7.2 Carefully position the coil body assembly (4) on to the motor shaft.
   7.3 Align the fixing screw holes with the bores on the friction disc or end flange of the motor and insert the fixing screws (11).
   7.4 Tighten the fixing screws (11) slowly and in sequence until the coil body assembly (4) is touching the end flange of the motor (or the friction disc).
   7.5 Using a suitable torque wrench and hex screwdriver bit, tighten the fixing screws to the correct torque (see *Technical data for the NM387-series brakes*).

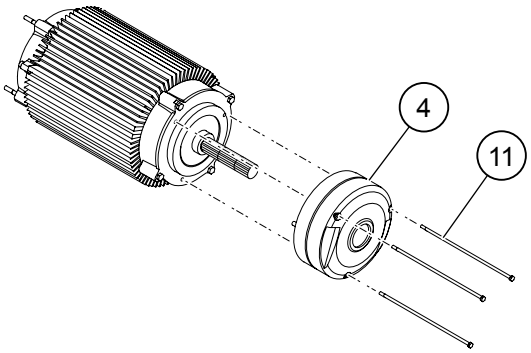

8. If the the brake coil cable has been detached, feed it through the cable gland and into the terminal box. Reconnect the cable in the terminal box (the polarity is not important).
9. Install the fan (if the motor is equipped with a fan), fan cover, and encoder (if the motor is equipped with an encoder). For encoder installation instructions, see *Reassembling an incremental encoder*.
10. Switch on the power supply to the motor and brake.

4.17 Maintaining the electrical equipment cubicle and its components

For information on additional inspection requirements and detailed instructions on each component, see the manufacturer's documentation.

Copyright © (2016) Konecranes. All rights reserved.

4.17.1 Maintenance schedule for the electrical equipment cubicle and its components

Table 67. Electrical equipment cubicle - electrical maintenance schedule

Component	Maintenance task	500 h	1000 h	2000 h	4000 h (1 year)	Other interval/ Notes
Electrical cubicle	Visual	x				
	Vacuum clean				x	
Emergency stop	Visual and operational	x				
Radio modem (mbNET)	Visual and operational	x				
Resistor banks	Visual	x				
Electric cubicle lightning	Visual and operational	x				
Ventilation fan	Visual and operational	x				
Ventilation fan filter	Visual and operational	x				
Frequency converters	Visual	x				
	Clean the dust from the heatsink. Be careful when unmounting the frequency converter, and lock the fans before blowing compressed air to the device. Prevent the dust from spreading inside the cubicle. For other maintenance tasks, refer to the manufacturer's documentation.					every 6...24 months (depending on the environment)
Brake contactors	Check the number of starts from the frequency converter. See *Maintaining the brake control circuits*	x				
PLC unit	Visual	x				
Web CMS unit	Visual	x				
Camera PC	Visual	x				
GPS unit	Visual	x				
Radio receiver	Visual	x				

Copyright © (2016) Konecranes. All rights reserved.

Table 68. Electrical equipment cubicle - mechanical maintenance schedule

Component	Maintenance task	500 h	1000 h	2000 h	4000 h (1 year)	Other interval/ Notes
Fire extinguisher	Inspect and refill, see *Inspecting and refilling the fire extinguishers*	x				

Table 69. Electrical equipment cubicle lubrication schedule

Component	Maintenance task	500 h	1000 h	2000 h	4000 h (1 year)	Other interval/ Notes
Door hinges	Oil spray				x	

4.17.2 Cleaning the electrical equipment cubicles

Clean the equipment in the electrical equipment cubicles. Perform the following safety tasks before cleaning:

1. Disable electrical supplies from the main diesel alternator enclosure:
   1.1 Switch off the electrical supply from the diesel alternator set to the electrical equipment cubicles and isolate it from the source during this work.
   1.2 Prevent electrical supply from being re-energized accidentally.
   1.3 Place a safety warning notice **Do NOT Switch On** at the isolation point.
   1.4 Stop the main diesel alternator set and prevent from running (for example, by pressing an emergency stop button).
2. Optionally for the main diesel alternator set, disable the site electrical supplies:
   2.1 If the crane is connected to a site electrical supply, switch off the supply and isolate it at the supply point during this work.
   2.2 Prevent electrical supply from being re-energized accidentally.
   2.3 Place a safety warning notice **Do NOT Switch On** at the isolation point.

Vacuum-cleaning the control equipment

To avoid the accumulating dirt on the control equipment, maintain a high level of cleanliness in the cubicles. At the interval that is stated in the maintenance schedule (typically every year or 3000 hours), remove any loose dirt from all control equipment.

Cleaning locations are:
- Operator's cabin
- Electrical equipment cubicle next to the cabin
- Electrical equipment cubicle row on the machinery platform
- Trolley electrical equipment cubicle
- Skew machinery electrical equipment cubicle

To clean the control equipment:

1. Isolate the electrical supplies to all components, including the panel heaters.
   The temporary site supply must also be switched off.

Copyright © (2016) Konecranes. All rights reserved.

2. Using a vacuum cleaner with an insulated (plastic) nozzle, remove any accumulated dirt from the control equipment and from the cubicles.
3. After completing the cleaning work, re-energize the electrical supply to the anti-condensation heaters for the equipment and panels.

NOTE ***When all of the crane electrical supplies are switched off for safety reasons, no power is available from any of the tool sockets around the crane. Instead, connect the powered tools to a site supply point or a mobile generator with a wandering supply lead.***

4.17.3 Maintaining the resistor bank

⚠ WARNING

HOT SURFACES HAZARD

If the crane has been running just before the start of this cleaning task, the resistors may still be hot.

Do not touch the hot resistor banks without safety gloves. Wait until the resistor banks have cooled down before starting work.

Resistor banks are located at the end of the electrical equipment cubicle row. The resistor bank is maintenance free. If the resistor banks do require cleaning or inspection, first read carefully the following safety instructions.

1. Disable electrical supplies from the main diesel alternator set:
   - 1.1 Switch off the main electrical supply to the frequency converter and isolate it from the source during this work.
   - 1.2 Prevent the supply from being re-energized accidentally.
   - 1.3 Place a safety warning notice **Do NOT Switch On** at the isolation point.
   - 1.4 Stop the main diesel alternator set and prevent it from running (for example, by pressing an emergency stop).
2. Optionally for the main diesel alternator, disable the site electrical supplies:
   - 2.1 If the crane is connected to a site electrical supply, switch off and isolate the supply during this work.
   - 2.2 Prevent the supply from being re-energized accidentally.
   - 2.3 Place a safety warning notice **Do NOT Switch On** at the isolation point.
3. Wear safety goggles during air-blast cleaning and water jet cleaning.
4. To prevent inhalation of dust during air-blast cleaning, wear a face mask.

4.17.4 Maintaining the frequency converters

Location of frequency converters

Boxhunter crane motors are equipped with the following frequency converters:

Copyright © (2016) Konecranes. All rights reserved.

Frequency converter	Location
Gantry traveling motor frequency converter (x 1)	Electrical equipment cubicle row on the machinery platform
Hoisting motor frequency converter (x 1)	Electrical equipment cubicle row on the machinery platform
Trolley traveling motor frequency converter (x 1)	Electrical equipment cubicle row on the machinery platform
Skew machinery motor frequency converter (x 1)	E5 (skew machinery electrical equipment cubicle)

Cleaning the frequency converter ventilation

Several items of the motor frequency converter are fitted with ventilation fans. The fans ensure that the heat is removed from components which have high-power dissipation. If the fans do not work correctly, the equipment will overheat. This is likely to lead to an equipment failure and the break-down of the crane.

To ensure that all of the fans are running correctly and that the air flow is not obstructed, check the equipment according to the maintenance schedule. Clean the dust from the heatsink. Check and clean the filters where applicable.

4.17.5 Maintaining the brake control circuits

Frequency converters calculate the number of starts in the crane system. Once 500,000 starts have been reached in hoisting or traveling movement, it is recommended that the equivalent brake contactor (K7) is replaced. Hoist and gantry brake contactors are located at the ends of the electrical equipment cubicle row of the machinery platform, and the trolley brake contactors are located in the trolley platform electrical equipment cubicle.

The number of starts can be read from the frequency converter display by navigating in the menu to the variable **V4.4.3 Start Counter**. The Start Counter is shown in format 0.000 x 1k. For example, 1.325 x 1k means 1.325 x 1000 = 1325 starts.

NOTE ***When replacing a brake contactor, replace also the relay / thermistor board of the frequency converter and the timer block for the brake contactor at the same time.***

NOTE ***In case of hoist and gantry traveling brake contactors, you can only analyze with the help of Web CMS which one of the contactors exceeds the limit of 500,000 starts. Therefore, it is recommended that you replace both hoist and gantry traveling brake contactors at the same time.***

4.18 Maintaining the operator's cabin

⚠ WARNING

ACCIDENTAL OPERATION HAZARD

While moving around in the cabin, there is the risk of accidental operation of the joysticks or other controls.

To prevent the accidental operation, make sure that the crane drives are off.

Copyright © (2016) Konecranes. All rights reserved.

4.18.1 Maintenance schedule for the operator's cabin

Table 70. Cabin electrical maintenance schedule

Component	Maintenance task	500 h	1000 h	2000 h	4000 h (1 year)	Other interval/ Notes
Emergency stop (machineries)	Visual and operational	x				
Emergency stop (diesel)	Visual and operational	x				
Camera monitors and displays	Visual and operational	x				
Controller	Visual	x				
Working lights (outside the cabin)	Visual and operational	x				

Table 71. Cabin mechanical maintenance schedule

Component	Maintenance task	500 h	1000 h	2000 h	4000 h (1 year)	Other interval/ Notes
Fire extinguisher	Inspect and refill, see *Inspecting and refilling the fire extinguishers*	x				
Windows and window washers	Visual and operational	x				
Cabin suspension rubbers	Visual	x				
Air conditioning unit	Visual and operational	x				
Air conditioning: compressor and condenser	See the manufacturer's instructions					
Air conditioning: hoses	Visual	x				

Copyright © (2016) Konecranes. All rights reserved.

Table 72. Cabin lubrication schedule

Component	Maintenance task	500 h	1000 h	2000 h	4000 h (1 year)	Other interval/ Notes
Cabin door hinges	Grease		x			

4.18.2 Checking and cleaning the wipers and washers

To check and clean the windshield wipers and washers:

1. Make sure that the wipers and washers operate correctly.
2. Make sure that the wiper blades are not damaged.
3. Fill the washer reservoir regularly with clean water.
   To improve its cleaning properties, add a small quantity of windshield washing fluid to the water.

4.18.3 Cleaning the operator panel touch screen

Clean the operator panel touch screen at a regular interval, especially if it is operated with dirty or greasy fingers.

1. Disconnect the communication cable of the operator panel.
2. While all of the function of the touch screen are disabled, wipe the screen with a clean dampened cloth.
3. To remove greasy marks, only use either water with a small amount of detergent (washing-up liquid) or a special screen cleaner.
   Put the liquid (or foam) onto the cloth first.

NOTE ***Do not pour or spray any liquid or foam directly onto the touch screen.***

4. Reconnect the communication cable of the operator panel.

4.18.4 Maintaining the camera and display system

To maintain the camera and display system:

1. Make sure that the trolley camera is mounted and aligned correctly and that there is no mechanical damage.
   1.1 If necessary, adjust the trolley camera position with the four springs (1). Unmount the nuts (2) first:

Copyright © (2016) Konecranes. All rights reserved.

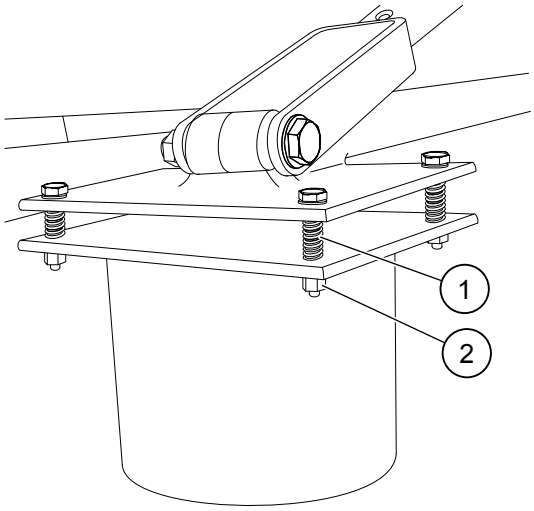

1.2 At the same time, check the trolley camera view on the main display. When the trolley is moved above a container stack, the ground-level crosshair horizontal line is set along the long edge of the bottom container:

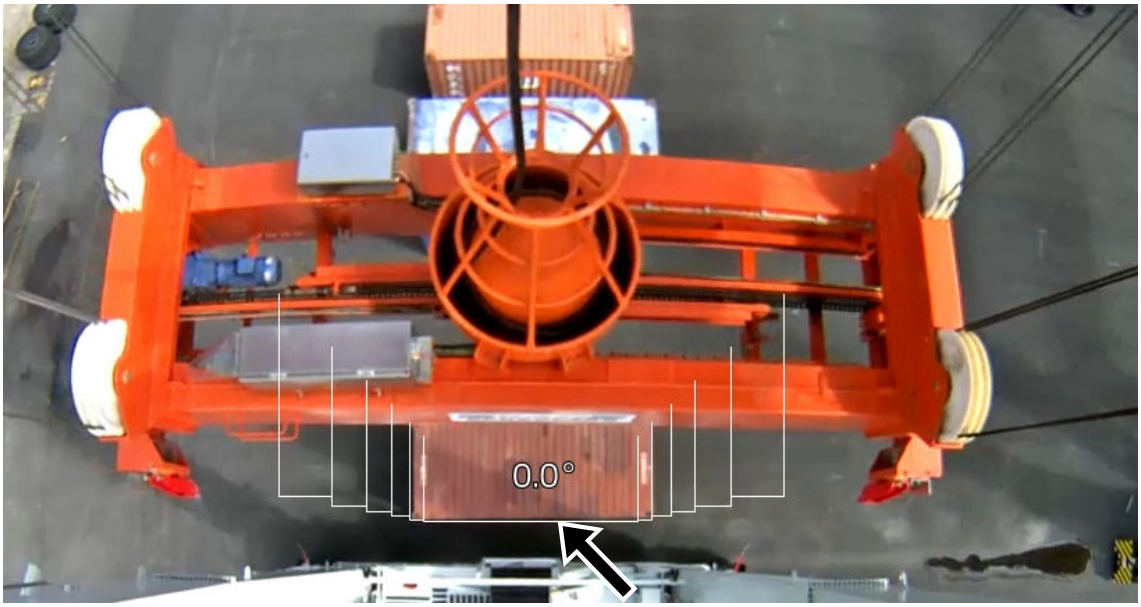

2. Ensure that the four spreader cameras are mounted and aligned correctly and that there is no mechanical damage.
   When the spreader has landed on top of the container correctly, the four spreader camera views are symmetrical:

Copyright © (2016) Konecranes. All rights reserved.

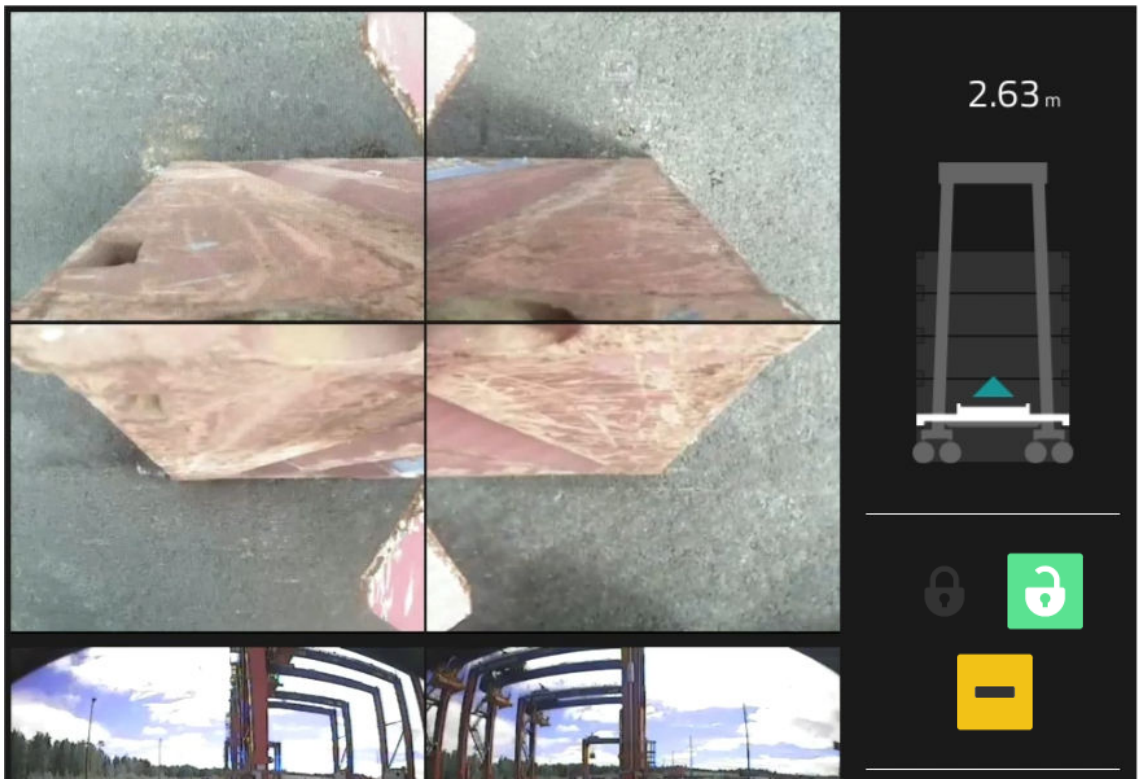

3. Make sure that the four gantry cameras (located on the bogies) are working properly on the main display (all four camera views).
   3.1 When driving the gantry to the right (in the long travel mode), or forward (in the cross mode), the top row is highlighted to indicate the driving direction and a small blue camera symbol appears under the row:

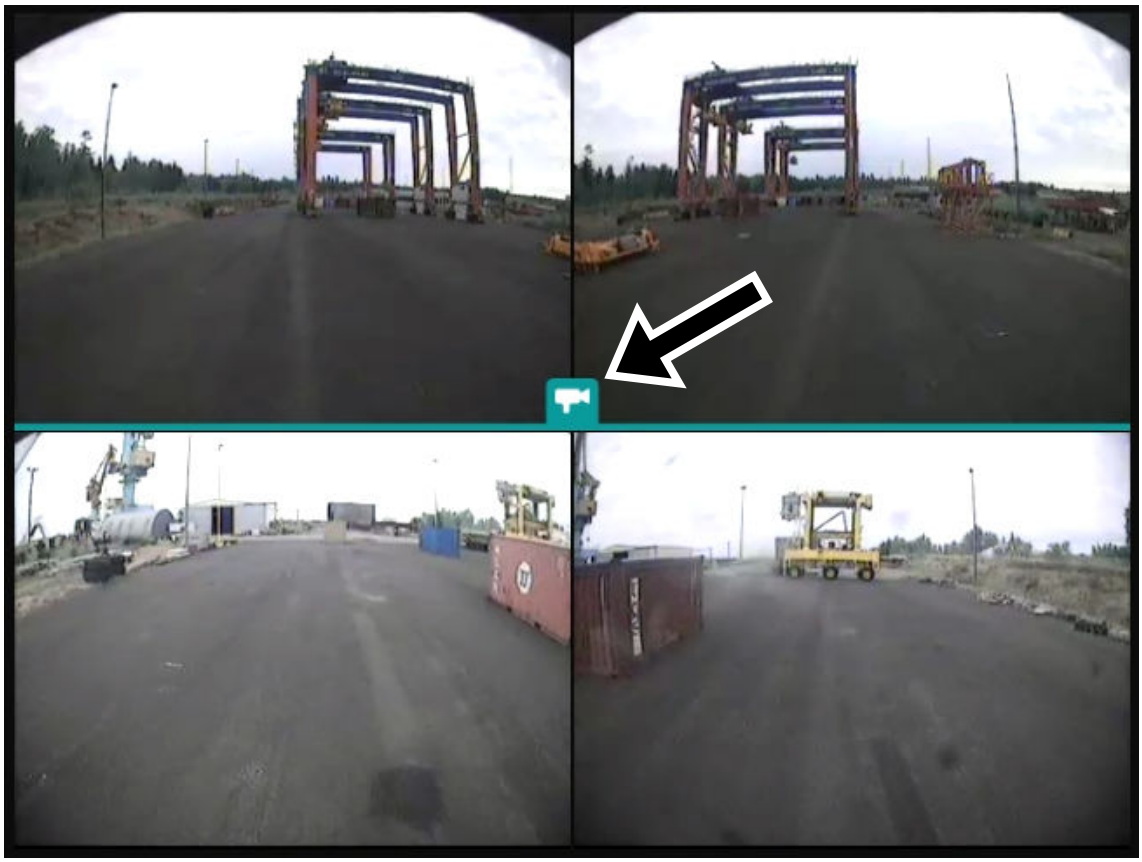

Copyright © (2016) Konecranes. All rights reserved.

3.1 When driving the gantry to the left (in the long travel mode), or backward (in the cross mode), the bottom row is highlighted to indicate the driving direction and a small blue camera symbol appears under the row.

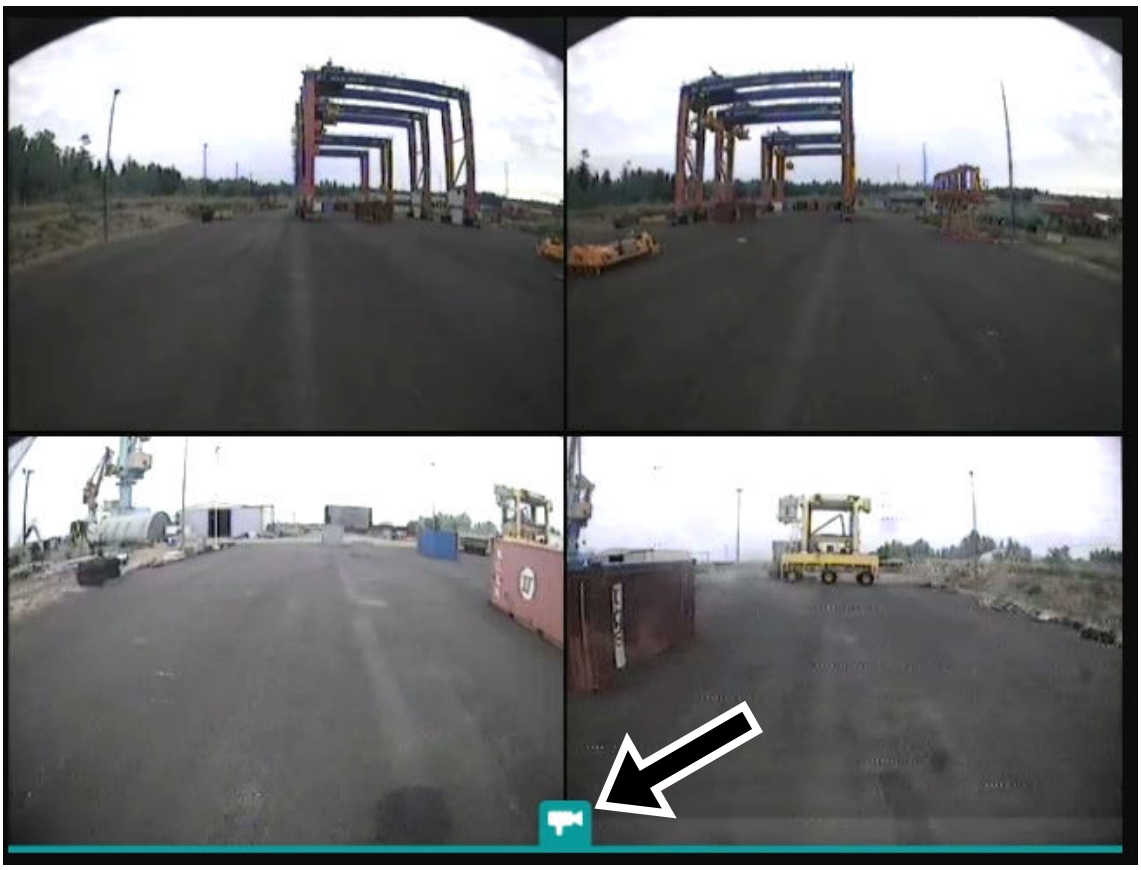

4. If the view from a camera is not clear, make sure that the glass in the front of the lens is not covered with water droplets or dirt:
   4.1 Remove water droplets with a clean dry cloth or chamois leather. You can also use a clean damp cloth, but use it with caution not to scratch the glass.
   4.2 To remove greasy marks or dead insects, you can use detergent (washing-up liquid) or glass cleaner (vehicle screen wash). Put cleaning liquid onto the cloth first.

NOTE ***Do not pour or spray any liquid directly onto a camera, even if it has a weather-proof casing.***

4.19 Maintaining the fire extinguishers

The type of the fire extinguisher depends on the local regulations. To ensure the good condition of the extinguishers, inspect them on a regular basis. Make sure that the content of the extinguishers remains full.

The manufacturer supplies and installs the extinguishers but the maintenance, regular inspections, and user training according to local regulations are the responsibility of the owner.

NOTE ***Any extinguisher that has been discharged while fighting a fire (or otherwise accidentally discharged), must be refilled or replaced with a fully filled one, immediately before operating the crane.***

Copyright © (2016) Konecranes. All rights reserved.

4.19.1 Types and preferred sizes of fire extinguishers

Table 73. Types and preferred sizes of fire extinguishers

Quantity	Location	Type	Preferred size
			Kg
1	Inside the operator's cabin	CO2	3
1	Outside the diesel alternator enclosure (next to the bogie C)	Dry Chemical Powder	5
1	On the right side of the electrical equipment cubicle row	CO2	3

4.19.2 Inspecting and refilling the fire extinguishers

Inspect the fire extinguisher monthly or according to the local statutory fire safety regulations.

1. Make sure that there are no signs of external mechanical damage or corrosion, including the discharge nozzle and pipe.
2. Make sure that the extinguisher is full: either compare its weight with the information on the manufacturer's label for a fully charged unit or check the charge gauge or meter.
3. Make sure that the firing safety pin is in place.
4. Make sure that the statutory inspection date on the label sticker has not expired.
5. Refill the discharged extinguisher as soon as possible, in accordance with the manufacturer's instructions.

Copyright © (2016) Konecranes. All rights reserved.

5 TROUBLESHOOTING

The **Diagnostics** section of the **Web CMS** helps in monitoring and troubleshooting the crane operations. It provides information on all active faults, alarms, and events. For more information, see *Owner's Manual for Web CMS*.

Copyright © (2016) Konecranes. All rights reserved.

6 TRANSPORTATION, STORAGE AND DISMANTLING

6.1 Transporting the product

If you need to transport the crane, contact Konecranes. Transporting the crane without the written approval from Konecranes voids the warranty.

6.2 Storing the product

When storing the crane or its components, take the following precautions:

- Park and shut down the crane as instructed in *Shutting down the crane* in the operating instructions.
- To protect the crane against external factors, such as moisture and condensed water, keep the crane connected to the shore power, leave the anti-condensation heating and air conditioning on, and close all doors and hatches.
- Make sure that the crane is appropriately secured for high wind with tie-downs or by attaching the spreader to a heavy container on the ground. For more information, see *Securing the crane in high wind* in the operating instructions.

NOTE ***If stored improperly, essential parts of the product can become damaged. Defects or faults which are due to improper storage are not covered by the product warranty.***

6.2.1 Returning the product to use

Before taking the crane to use after long-term storage, carry out the normal pre-start checks. For more information, see *Check before operating the crane* in the operating instructions.

If the crane has been out of service for more than three months, perform the insulation resistance measurement for the electrical motors.

Before taking the crane back to use, keep it on shore power first and switch on the anti-condensation heaters and air-conditioning on to reduce condensation.

6.3 Dismantling the product

If the product must be dismantled, follow these safety instructions:

- Follow the safety precautions for dismantling the product. For example, when working at heights, follow the fall protection procedures. Only experienced service personnel are permitted to dismantle the product.
- Owner shall nominate a person responsible for the dismantling process. This person shall give instructions and monitor the process.
- All controls must be placed in the OFF position, safety switches must be opened, and the main isolator switch must be turned off. The product must be electrically isolated before dismantling starts.
- Make sure that all personnel involved are aware that the product will be dismantled before dismantling starts.
- Owner must prevent unauthorized persons and bystanders from walking on or below the work site. Ensure that the secured area is spacious enough to prevent injuries which could occur as a result of falling components or tools.
- Only use safe tools and machinery for dismantling.
- Make sure that removed fastenings and components will not fall.
- Pay attention to the environmental conditions. For example, do not disassemble the product if the prevailing weather could compromise safety.
- Disassembly sequence is completed in the reverse order to the assembly sequence. Refer to installation and assembly instructions for correct sequence.
- After the product has been dismantled, the owner or person responsible for dismantling can return the working area back to normal use.

If you need more detailed dismantling instructions, contact the manufacturer of the product.

Copyright © (2016) Konecranes. All rights reserved.

APPENDIX I: RECOMMENDED LUBRICANTS

Lubricant groups

The following tables list the suitable oils, greases, and hydraulic fluids. For each group of applications, lubricants from a number of manufacturers are included. Also, there are different grades of lubricant, depending on the ambient temperature range at the site.

NOTE ***Recommended lubricant may be different from the one listed in the equipment manufacturer's data sheets. The choice of lubricant is based on careful consideration of the duty for each item of equipment and a consultation with the equipment manufacturer. The changes usually allow a single lubricant to be used over a wider range of ambient temperature.***

Table 74. Lubricant groups

Group number	Component
1	Gearboxes (splash lubricated), transmission chains
3	Anti-friction and plain bearings, grease lubrication
4a	Transmission gears (not in a gearbox)
4b	Steel wire ropes
5	Electro-hydraulic thrusters
6	Hydraulic systems
8	Pumped grease lubrication system (central)
10	Light oil can
11	Grease-packed couplings

Some of the lubricants in group 4 contain a diluter which evaporates after smearing. In this case, they must be smeared 4-8 hours before the device is commissioned.

Under most normal operating conditions, just one grade of oil can be used all year round. This also applies to outdoor applications. If only one oil is used, select the grade that is based on the summer temperature, but verify that the lowest operating temperature during the winter is sufficiently above the waxing or solidification point.

ISO viscosity grades for industrial oils

There are 18 ISO viscosity grades, where the viscosity of each grade is about 50% higher than the preceding grade. The limit values are ± 10% of the average viscosity value. The following table gives the values for the viscosity grades that are used by Konecranes:

Table 75. ISO viscosity grades for industrial oils

ISO viscosity grade (ISO 3448-1975)	Average viscosity cSt / 40 ºC	Viscosity limit values (cSt / 40 ºC)	
		Minimum	Maximum
ISO VG 7	6.8	6.12	7.48
ISO VG 10	10	9.0	11.0
ISO VG 15	15	13.5	16.5

Copyright © (2016) Konecranes. All rights reserved.

ISO viscosity grade (ISO 3448-1975)	Average viscosity cSt / 40 ºC	Viscosity limit values (cSt / 40 ºC)	
		Minimum	Maximum
ISO VG 22	22	19.8	24.2
ISO VG 32	32	28.8	35.2
ISO VG 46	46	41.4	50.6
ISO VG 68	68	61.2	74.8
ISO VG 100	100	90	110
ISO VG 150	150	135	165
ISO VG 220	220	198	242
ISO VG 320	320	288	352
ISO VG 460	460	414	506

Group 1: Gearboxes (oil splash lubricated) and transmission chains

There are 18 ISO viscosity grades, where the viscosity of each grade is about 50% higher than the preceding grade. The limit values are ± 10% of the average viscosity value. The following table gives the values for the viscosity grades that are used by Konecranes:

Table 76. ISO viscosity grades for industrial oils

ISO viscosity grade (ISO 3448-1975)	Average viscosity cSt / 40 ºC	Viscosity limit values (cSt / 40 ºC)	
		Minimum	Maximum
ISO VG 7	6.8	6.12	7.48
ISO VG 10	10	9.0	11.0
ISO VG 15	15	13.5	16.5
ISO VG 22	22	19.8	24.2
ISO VG 32	32	28.8	35.2
ISO VG 46	46	41.4	50.6
ISO VG 68	68	61.2	74.8
ISO VG 100	100	90	110
ISO VG 150	150	135	165
ISO VG 220	220	198	242
ISO VG 320	320	288	352
ISO VG 460	460	414	506

[Y = Yes / OK]

If a longer oil change interval is required, or it is necessary to use the same oil for a wider temperature range, oils with synthetic and metallic additives are recommended for use. In these cases, clarify the oil change interval, operating temperature range, and compatibility with the sealing materials and interior paint of the gearbox assembly with the oil supplier.

Copyright © (2016) Konecranes. All rights reserved.

Group 3: Anti-friction bearings and plain bearings (grease lubricated)

These greases are intended for the lubrication of anti-friction (ball or roller) bearings and plain bearings. Because of their wide operating temperature range and good water resistance, they may also be used as multi-purpose greases.

NOTE ***Graphite greases are NOT recommended for anti-friction bearings.***

Table 77. Group 3 lubricants

Grease type	Manufacturer product name and number	Ambient temperature (ºC)			Drip point(ºC)	Operating temp. range (ºC)
		-30 to +5	-5 to +35	+15 to +60		
A. Universal greases	BP Energrease LS2	Y	Y	Y	190	-30 to +130
	Castrol Spheerol AP2	Y	Y	Y	175	-
	Esso Beacon 2	Y	Y	Y	185	-40 to +120
	Esso Beacon EP2	Y	Y	Y	185	-30 to +125
	Esso Unirex N2	Y	Y	Y	304	-30 to +165
	Gulfcrown Grease No. 2	-	Y	Y	193	-20 to +120
	LE 1275	Y	Y	Y	-	-30 to +200
	Mobil Mobilgrease MP	Y	Y	Y	170	-30 to +120
	Shell Alvania EP Grease 1	Y	-	-	180	-30 to +100
	Shell Alvania EP Grease 2	-	Y	Y	180	-30 to +120
	Shell Syntix 460	Y	Y	Y	-	-
	TB Multi-Purpose Grease	Y	Y	Y	185	-30 to +110
	Texaco Multifak 2	Y	Y	Y	200	-30 to +120

Copyright © (2016) Konecranes. All rights reserved.

Grease type	Manufacturer product name and number	Ambient temperature (ºC)			Drip point(ºC)	Operating temp. range (ºC)
		-30 to +5	-5 to +35	+15 to +60		
B. Anti-freezing greases	BP Energrease LS1	Y	Y	-	170	-50 to + 80
	Esso Unirex Grease	Y	Y	Y	260	-60 to + 80
	Esso Unirex Lotemp EPS2	Y	Y	Y	>260	-50 to +220
	LE 3751	Y	Y	Y	282	-45 to +300
	Mobil Mobilgrease 28	Y	Y	Y	260	-55 to +180
	Shell Albida Grease HLS	Y	Y	Y	>260	-30 to +170
	Shell Alvania EP Grease 1	Y	Y	-	180	-30 to +110
	Shell Grease Syntix 100	Y	Y	Y	260	-40 to +150
	TB O-Grease	Y	Y	-	190	-50 to + 80
	Texaco All Temp Grease	Y	Y	-	282	-54 to + 80

[Y = Yes / OK]

Copyright © (2016) Konecranes. All rights reserved.

Group 4 B: Steel wire ropes (grease lubricants)

Table 78. Group 4 B lubricants

Manufacturer product name and number	Ambient temperature (ºC)			Drip point (ºC)	Operating temp. range (ºC)
	-30 to +5	-5 to +35	+15 to+60		
BP Energol GR3000-2	-	Y	Y	60	-
Esso EOL232	Y	Y	Y	none	-30 to +300
Gulf Lubcote NR1	Y	Y	Y	-	-40 to +100
LE 450L	Y	Y	Y	-	-25 to + 70
Mobil Mobilarma 798	Y	Y	Y	63	-40 to + 60
Shell Ensis Fluid K	Y	Y	Y	-	-40 to +100
TB Gear Grease MDS	Y	Y	Y	none	-35 to +300
Tekno-Spray LPS3	-	Y	Y	-	-50 to +280

[Y = Yes / OK]

Copyright © (2016) Konecranes. All rights reserved.

Group 5: Electro-hydraulic thrusters

Table 79. Group 5 lubricants

Viscosity cSt / 40°C		Manufacturer product name and number	Ambient temperature (°C)			Congeal point (°C)	Visc. index VI	Operating temp. range (°C)
			- 30 to +5	-5 to +35	+15 to +60			
ISO VG 15	14	BP Energol SHF LT15	(Y)	Y	(Y)	-51	>300	-25 to +30
	8	Mobilec T44	Y	Y	-	-56	70	-40
	13	Esso Univis J13	Y	Y	(Y)	<-59	378	-30 to +50
	15	EssoUnivis NI5	Y	Y	(Y)	-48	157	-
	22	Esso Univis N22	(Y)	Y	Y	-48	145	-
	8.8	Shell Diala Oil DX	Y	Y	-	-45	-	-
	10	Shell Morlina 10	-	Y	-	-57	61	-
	13.8	Shell Aero Fluid 4	Y	-	-	-60	410 V/E	-30 to +50
	10.6	Tebo Larita Oil 10	(Y)	Y	(Y)	-54	85	-25 to +50
	14.4	Tebo Hydraulic Artz Oil	Y	Y	(Y)	-60	395	-30 to +50
ISO VG 32	35	BP Energol 5HF32	-	-	Y	-36	180	+6 to +60
	30	Gulf Hydraulic Oil 32 Super	-	-	Y	-51	181	+6 to +60
	32	Shell Tellus Oil T32	-	Y	-	-42	195	-
	32	Shell Tellus Oil S32	-	-	Y	-33	105	-
	29.3	Tebo Hydraulic Oil 32S	-	-	Y	-54	180	+6 to +60

[Y = Yes / OK]

NOTE ***Products with (Y) in parentheses do not cover the whole temperature range.***

Copyright © (2016) Konecranes. All rights reserved.

Group 6: Hydraulic systems

The high-viscosity index of these hydraulic oils allows them to be used at varying and low temperatures. The maximum permissible momentary temperature of the oil is +60ºC.

Table 80. Group 6 lubricants

Viscosity cSt / 40°C		Manufacturer product name and number	Ambient temperature (°C)			Congeal point (°C)	Visc. index VI
			- 30 to +5	-5 to +35	+15 to +60		
ISO VG 15	14	BP Energol SHF LTI5 (ISO)	Y	Y	-	- 51	300
	14.5	Castrol Hyspin AWH15	Y	Y	-	- 51	147
	15	EssoUnivisNl5	Y	Y	-	- 48	157
	26	Esso Hydraulic Oil J26	Y	Y	Y	< - 59	395
	16	Mobil DTE11	Y	Y	-	- 44	159
	15	Shell Tellus Oil T15	Y	Y	-	< - 51	153
	12	TB Hydraulic Oil 15	Y	Y	-	- 60	170
ISO VG 32	35	BP Energol SHF32 (ISO)	Y	Y	-	- 36	180
	31.8	Esso Univis N32	(Y)[1]	Y	Y	- 45	152
	31	Gulf Harmony 32AW	Y	Y	-	- 30	112
	29	Mobil DTE13	Y	Y	Y	- 45	151
	30	Shell Tellus Oil T32	-	Y	-	- 42	153
	31	TB Hydraulic Oil 32	Y	Y	-	- 51	150
	32	Texaco Rando Oil HD-AZ	Y	Y	-	- 39	200
ISO VG 46	43	BP Energol 5HF46 (ISO)	Y	Y	-	- 36	160
	42	Castrol Hyspin AWH46	Y	Y	-	- 33	152
	45.7	Esso Univis N46	-	Y	Y	- 39	151
	44	Gulf Harmony46AW	Y	Y	-	- 30	113
	43	Mobil DTEI5	-	Y	Y	- 45	158
	46	Shell Tellus Oil T46	-	-	Y	- 39	154
	43	TB Hydraulic Oil 46	Y	Y	-	- 54	160

[Y = Yes / OK]

NOTE ***Products with (Y) in parentheses do not cover the whole temperature range.***

Copyright © (2016) Konecranes. All rights reserved.

Group 8: Pumped or central grease lubrication system

These greases have a good pumping capability. They contain pressure resistant additives.

Table 81. Group 8 lubricants

Grease type	Manufacturer product name and number	Ambient temperature (°C)			Drip point (°C)	Operating temp. range (°C)
		-30 to +5	-5 to +35	+15 to +60		
A. Universal greases	BP Energrease PR-EP1	-	Y	-	95	- 20 to + 50
	Esso Beacon EPi	-	Y	Y	185	- 10 to + 125
	Esso Beacon EPO	-	Y	Y	185	- 10 to + 120
	Esso Beacon EP2	-	-	Y	185	+ 5 to + 125
	Gulf Crown Grease EPI	-	Y	Y	195	- 20 to + 120
	LE4701	Y	Y	Y	-	-
	Mobil Mobilplex 47	Y	Y	Y	260	- 30 to + 140
	Mobil Mobilux EP2	-	Y	Y	180	- 20 to + 130
	Shell Alvania EP2	-	Y	Y	180	-
	TB Multi-Purpose Extra	Y	Y	Y	190	- 35 to + 110
	Texaco Multifak EPI	Y	Y	Y	183	- 30 to + 120
B. Anti - freezing greases	BP Energrease FGL	Y	-	-	95	- 30 to + 30
	Esso Unirex Grease	Y	Y	Y	260	- 40 to + 80
	Esso EGL Lotemp EP3818A	Y (-40...)	Y	Y	180	- 40 to + 100
	Mobil Mobilplex 45	Y (-40...)	Y	Y	260	- 30 to + 130
	Mobil Mobilux EPI	Y	Y	Y	170	- 30 to + 120
	Molub-Alloy Arctic-Grease	Y	Y	-	-	-
	Shell Alvania EPO	Y	-	-	175	- 30 to + 100
	Shell Alvania EPI	-	Y	Y	180	- 30 to + 110
	Shell Grease Centra W	Y(-40...)	Y	-	200	- 40 to + 100
	TB 0-Grease	Y (-40...)	Y	-	190	- 50 to + 80

[Y = Yes / OK]

Copyright © (2016) Konecranes. All rights reserved.

Group 10: Light oil can

Table 82. Group 10 lubricants

Manufacturer	Manufacturer product name and number	Notes
Castrol	TXT 5W-40	
Castrol	GTX3 15W-40	
Esso (Exxon)	Extra Motor Oil 10W-30	
Esso (Exxon)	Super Oil 10W-40	
Mobil	Special 10W-30	
Mobil	Super 10W-40	
Mobil	Super 15W-50	
Neste	Beta 10W-40	
Neste	Gamma 10W-30	
Shell	Super Plus 10W-40	
Castrol	RS 5W-50	SYNTHETIC
Castrol	RS 10W-60	SYNTHETIC
Esso (Exxon)	Ultra Oil 10W-30	SYNTHETIC
Mobil	One 5W-30	SYNTHETIC
Mobil	One Rally Formula 5W-50	SYNTHETIC
Neste	Alpha 1 10W-30	SYNTHETIC
Neste	Alpha 2 10W-40	SYNTHETIC
Shell	Helix 10W-40	SYNTHETIC
Shell	TMO 5W-30	SYNTHETIC

Copyright © (2016) Konecranes. All rights reserved.

Group 11: Grease-packed couplings

The following Molybdenum greases are recommended for all couplings.

Table 83. Group 11 lubricants

Manufacturer	Manufacturer product number
BP	Energrease L21-M
Castrol	MS3
Esso (Exxon)	Beacon Q2
Fuchs	Renolit FLM2
Mobil	Mobilgrease Special 2
Shell	Grease 1375 LIMO 2
Teboil	Universal M

The following greases are also approved for couplings that are manufactured by MAINA.

Manufacturer	Manufacturer product number
	Environment temperature (ºC) -20 to +70
AGIP	GR-MU/EP
Chevron	Dura Light Grease-EP
Shell	Alvania-EP
IP	Athesia-EP
Mobil	Mobiltemp 78
Esso (Exxon)	Beacon-EP

Copyright © (2016) Konecranes. All rights reserved.

APPENDIX II: OIL CHANGE SCHEDULE

Always follow product manufacturer's oil change schedule. Use only recommended lubricants. For more information, see the list of recommended lubricants for RTG.

Fill in the relevant information of oil changes of equipment.

Equipment number	Gear type	Gear serial number(s)

Oil change	Hours of use	Oil type	Service date	Technician
2 months/ 200h				
1 years/ 5000h				
2 years/ 10000h				
3 years/ 15000h				
4 years/ 20000h				
5 years/ 25000h				
6 years/ 30000h				
7 years/ 35000h				
8 years/ 40000h				
9 years/ 45000h				
10 years/ 50000h				
11 years/ 55000h				
12 years/ 60000h				
13 years/ 65000h				
14 years/ 70000h				
15 years/ 75000h				
16 years/ 80000h				
17 years/ 85000h				
18 years/ 90000h				
19 years/ 95000h				
20 years/ 100000h				

Copyright © (2016) Konecranes. All rights reserved.

APPENDIX III: TIGHTENING TORQUES

All bolts must be secured with tab washers, self-locking nuts (Nyloc nuts), double nuts, or torque tightening, if specifically requested in the mechanical drawings.

The following tightening torques are always applied on the bolts of strength class 8.8 unless any other instructions are given in the mechanical drawings.

Table 84. Tightening torque on bolts (strength class 8.8)

Bolt size	M6	M8	M10	M12	M16	M20	M24	M27	M30	M36	M42
Torque (Nm)	9	21	43	77	195	380	660	975	1325	2335	3730

NOTE ***Use always hardened washers both under a bolt head and under a nut when applying tightening torque.***

NOTE ***It is recommended that self-locking nuts (Nyloc nuts) are always replaced when removed. You can reuse self-locking nuts no more than 5 times.***

NOTE ***For gantry leg and main girder bolt joints, see the separate project-specific Bolt elongation data (page 297).***

Copyright © (2016) Konecranes. All rights reserved.

APPENDIX IV: TECHNICAL DATA FOR THE NM387-SERIES BRAKES

Table 85. Technical data for the NM387-series brakes

Brake type	Rated braking torque	Original thickness of a new brake disc	Min. thickness of the brake disc	Tightening torque for brake screws	Motor type
	Nm	mm	mm	Nm	
NM38730NR2	42	10.40	10.10	9	MF10
NM38740NR2	54	11.15	10.45	22	MF11

Copyright © (2016) Konecranes. All rights reserved.

APPENDIX V: TECHNICAL DATA FOR THE NM404-SERIES BRAKE

Table 86. Technical data for the NM404-series brake

Attribute	Unit	Value
Motor type		MT18
Brake code		NM40445NR2
Nominal torque	Nm	1600
Nominal air gap	mm	0.7
Maximum air gap (after wear)	mm	1.2
Brake disc thickness (new)	mm	12.8
Brake disc thickness (minimum)	mm	10.8
Voltage (overexcitation)	VDC	360
Overexitation time	s	0.7-1.0
Voltage (holding)	VDC	180
Resistance in (+20°C)	Ohms	207.3
Current (overexitation)	A	1.73
Current (holding)	A	0.87
Power (overexitation)	Watt	625
Power (holding)	Watt	156
Cyclic duration factor	ED	100 %
Weight	kg	75
Brake shim plate thickness	mm	0.2
Fixing bolts for brake		8 pcs M12 x 1.5
Brake fixing bolts initial tightening torque	Nm	50
Brake fixing bolts final tightening torque +-10%	Nm	74
Brake spring total amount	pcs	27

Copyright © (2016) Konecranes. All rights reserved.

APPENDIX VI: TECHNICAL DATA FOR THE NM408-SERIES BRAKE

Table 87. Technical data for the NM408-series brake

Brake type	Rated braking torque	Original thickness of a new brake disc	Nominal air gap	Maximum air gap	Tightening torque for brake screws	Motor type
	Nm	mm	mm	mm	Nm	
NM40830NR2	250	13.9	0.6	1.6	71	MF18

Copyright © (2016) Konecranes. All rights reserved.

APPENDIX VII: STRUCTURAL INSPECTION DRAWINGS

Copyright © (2016) Konecranes. All rights reserved.

APPENDIX VIII: BOLT ELONGATION DATA

Copyright © (2016) Konecranes. All rights reserved.

Copyright © (2016) Konecranes. All rights reserved.

www.konecranes.com

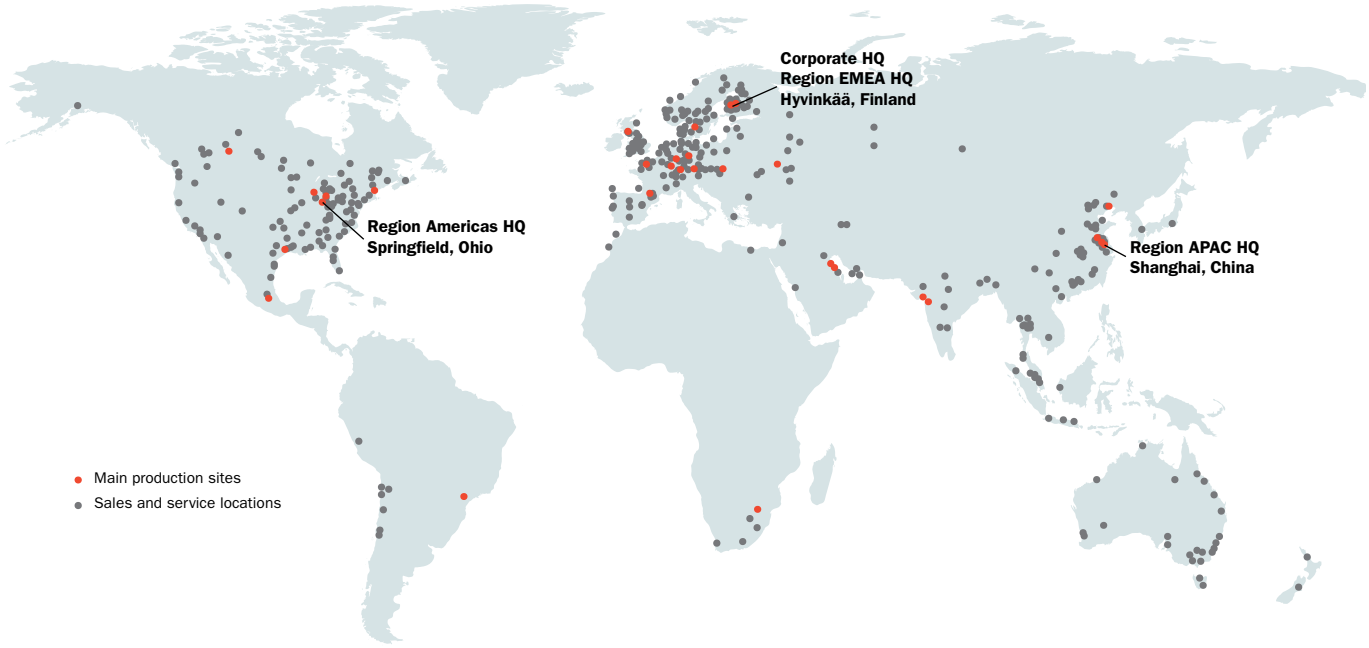

This document and the information contained herein, is the exclusive property of Konecranes Global Corporation and represents a non-public, confidential and proprietary trade secret that may not be reproduced, disclosed to other parties, altered or otherwise employed in any manner whatsoever without the express written consent of Konecranes Global Corporation. Copyright © 2016 Konecranes Global Corporation All rights reserved. ‘Konecranes’, ‘Lifting Businesses’ and C are either registered trademarks or trademarks of Konecranes Global Corporation.Copyright © (2016) Konecranes. All rights reserved.